WORKZONE®

ARC WELDER

OPERATING INSTRUCTIONS - USER GUIDE

Now you have purchased a Workzone® product you can rest assured in the knowledge that as well as your 3 year parts and labour guarantee you have the added peace of mind of dedicated helplines and web support.

AFTER SALES SUPPORT

GB 0151 649 1500
IRE 1890 946 244
www.einhell.co.uk

MODEL: WZAW 150, 10/2013

Contents

Welcome

1

Congratulations!

You have made an excellent choice with the purchase of this quality Workzone® product.

By doing so you now have the assurance and peace of mind which comes from purchasing a product that has been manufactured to the highest standards of performance and safety, supported by the high quality standards of ALDI.

We want you to be completely satisfied with your purchase so this Workzone® product is backed by a comprehensive manufacturer's 3 year warranty and an outstanding after sales service through our dedicated Helpline.

We hope you will enjoy using your purchase for many years to come.

If you require technical support or in the unlikely event that your purchase is faulty please telephone our Helpline for immediate assistance. Faulty product claims made within the 3 year warranty period will be repaired or replaced free of charge provided that you have satisfactory proof of purchase (keep your till receipt safe!). This does not affect your statutory rights. However, be aware that the warranty will become null and void if the product is found to have been deliberately damaged, misused or disassembled.

General Information and Safety Instructions

2

IMPORTANT: When using the equipment, a few safety precautions must be observed to avoid injuries and damage. Please read the complete operating instructions and safety regulations with due care. Keep this manual in a safe place, so that the information is available at all times. If you give the equipment to any other person hand over these operating instructions and safety regulations as well. We cannot accept any liability for damage or accidents which arise due to a failure to follow these instructions and the safety instructions.

Important information

Please read the operating instructions carefully and observe the information provided. It is important to consult these instructions in order to acquaint yourself with the equipment, its proper use and safety information.

IMPORTANT: Only use this appliance for the purpose for which it is designed and as described in these instructions: Manual arc welding with coated electrodes. Handling this system incorrectly may be hazardous for persons, animals and property. The user of this system is responsible for their own safety and for the safety of others. Read these operating instructions and follow all the regulations.

Electrical safety

- Repairs and/or maintenance work may only be carried out by qualified personnel.
- Use only the power cables and welding cables supplied.
- Ensure that the appliance is looked after properly.

- To ensure that sufficient air can be drawn in through the ventilation slits, the appliance should not be constricted or placed next to a wall while it is operating. Make sure that the appliance is correctly connected to the mains supply. Do not subject the mains lead to any tensile stress. Unplug the appliance before you change its position.
- Check the condition of the welding cables, the electrode tongs and the earth terminals (-); wear on the insulation and the live parts may result in dangerous conditions and reduce the quality of the welding work.
- Arc welding generates sparks, molten metal particles and smoke, so the following is required: Remove all inflammable substances and/or materials from the working area.
- Ensure that there is adequate ventilation.
- Do not weld on tanks, vessels or pipes that have contained inflammable liquids or gases. Avoid all direct contact with the welding circuit; the idling voltage between the electrode tongs and the earth terminal (-) may be dangerous.
- Do not store or use the appliance in wet or damp conditions or in the rain.
- Protect your eyes with specially designed goggles (DIN level 9-10), which you can attach to the supplied safety shield. Wear gloves and dry safety clothing that are not contaminated by any oil or grease to ensure that your skin is not exposed to ultraviolet radiation from the arc.

HAZARD:

- Do not use this welder to defrost pipes.
- Make sure that the equipment is set up so it stands firmly.
- The radiation from the arc can damage your eyes and cause burns on skin.
- Arc welding generates sparks and droplets of molten metal; the welded workpiece may start to glow and will remain very hot for a relatively long period of time.
- Arc welding releases vapours that may be harmful.
- Every electric shock is potentially fatal.
- Do not approach the arc within a radius of 15 m unprotected.
- Protect yourself (and others around you) against the possible hazardous effects of the arc.

General Information and Safety Instructions

2

WARNING: Depending on the mains connection conditions at the connection point of the welding set, other consumers connected to the mains may suffer faults.

IMPORTANT: If the supply mains and circuits are overloaded, other consumers may suffer interference during the welding work. If you have any doubts, contact your electricity supply company.

Proper use

The machine is to be used only for its prescribed purpose. Any other use is deemed to be a case of misuse. The user / operator and not the manufacturer will be liable for any damage or injuries of any kind caused as a result of this. Please note that our equipment has not been designed for use in commercial, trade or industrial applications. Our warranty will be voided if the machine is used in commercial, trade or industrial businesses or for equivalent purposes.

Sources of danger during arc welding

Arc welding results in a number of sources of danger. It is therefore particularly important for the welder to comply with the following rules so as not to place them or others in danger and to avoid endangering people and equipment.

- Have all work on the mains voltage system, for example on cables, plugs, sockets, etc., performed only by trained electricians. This particularly applies to configuring intermediate cables.
- If an accident occurs, disconnect the welding power source from the mains immediately.
- If electric touch voltages occur, switch off the welding set immediately and have it checked by an expert.
- Always check for good electrical contacts on the welding current side.

- Wear insulating gloves on both hands for welding. These offer protection from electric shocks (idling voltage in the welding circuit), harmful radiation (Heat and UV radiation) and from glowing metal and slag spatter.
- Wear firm, insulated footwear. Your shoes should also protect you in wet conditions. Open toed footwear is not suitable since falling droplets of glowing metal will cause burns.
- Wear suitable clothing, do not wear synthetic clothes.
- Do not look into the arc with unprotected eyes, use only a face shield with the proper safety glass in compliance with DIN standards. In addition to light and heat, which may cause dazzling and burns, the arc also gives off UV radiation. Without proper protection, this invisible ultraviolet radiation causes very painful conjunctivitis, which will only be noticeable several hours later. In addition, UV radiation will cause sunburn-type symptoms on unprotected parts of the body.
- Personnel or assistants in the vicinity of the arc must also be notified of the dangers and provided with the required protection; if necessary install safety walls.
- Ensure adequate ventilation for welding, particularly in small rooms since the process causes smoke and harmful gases.
- Do not carry out any welding work on tanks that have been used to store gases, fuels, mineral oil or the like, even if they have been empty for a lengthy period of time, since any residue will result in a danger of explosion.
- Special regulations apply in areas where there is a potential risk of fire and/or explosion.
- Welds that are exposed to large stresses and must comply with safety requirements may only be completed by specially trained and approved welders. Examples of such welds include pressure vessels, rails, trailer hitches, etc.

IMPORTANT: It must be noted that the protective conductor in electrical systems of appliances may be destroyed by the welding current in the event of negligence, for example if the earth terminal is placed on the welding set casing to which the protective conductor of the electrical system is connected. The welding work is completed on a machine with a protective conductor connection. It is therefore possible to weld on the machine without having connected the earth terminal to it. In this case the welding current will flow from the earth terminal through the protective conductor to the machine. The high welding current may cause the protective conductor to melt.

- Only fit a 13A fuse in the 13A plug fitted to the supply cable for this welder. Unplug the appliance before you change its position.

Constricted and wet areas

CAUTION: When working in constricted, wet or hot areas, use insulating supports and intermediate layers as well as slip-on gloves made of leather or other non-conductive materials to insulate your body against the floor, walls, conductive parts of the machine and the like. If you use small welding transformers for welding in places with an increase electrical risk, for example in constricted areas with conductive walls, (tanks, pipes, etc.), in wet areas (which make work clothes wet) and in hot areas (perspiration on work clothes), the output voltage of the welding set when idling must not exceed 48 V (effective value). Therefore, the appliance may not be used for these purposes because its output voltage is higher than this.

Safety clothing

CAUTION:

- While working, the welder must protect their entire body from radiation and burns by wearing suitable clothing and a face guard.
- Slip-on gloves made of a suitable material (leather) must be worn on both hands. They must be in perfect condition.
- Suitable aprons must be worn to protect clothing from sparks and burns. A safety suit and, if necessary, head protection must be worn if required by the type of work in question, e.g. overhead welding.
- The protective clothing used as well as all accessories must be in compliance with the "Personal safety equipment" EU Directive.

Protection from radiation and burns

CAUTION:

- Provide information about the risk to eyes at the working site in the form of a poster with the wording "Caution – do not look at the flames". Workplaces are to be screened off wherever possible so that personnel in the vicinity are protected. Unauthorised persons are to be kept away from the welding work.
- The walls in the immediate vicinity of stationary workplaces should not have a light colour or a sheen. Windows up to head height are to be protected against radiation passing through them or reflecting off them, for example by coating them with a suitable paint.

Do not store or use the equipment in wet conditions or in the rain. Use the equipment only indoors.

General Information and Safety Instructions

2

Symbols and technical data

EN 60974-6	European standard for arc welding sets and welding power supplies with limited on time (Part 6).
S	Symbol for welding power supplies which are suitable for welding in environments with increased electrical danger.
U_0	Rated idling voltage [V].
~ 50 Hz	Alternating current and rated frequency value [Hz].
80 A/ 21,2 V	Maximum welding current and the corresponding standardized operating voltage [A/V].
Ø	Electrode diameter [mm].
I_2	Welding current [A].
t_w	Average load time [s].
t_r	Average reset time [s].
1 ~ 50 Hz	Line input; number of phases, the alternating current symbol and the rated frequency value.
U_1	Line voltage [V].
I_{1max}	Highest rated value of the line current [A].
I_{1eff}	Effective value of the highest line current [A].
IP 21 S	Protection type.
H	Insulation class.
	Electrode holder connection.
	Ground terminal connection.
	Control lamp for overheating.

Assembly and Parts List

3

Fig 1

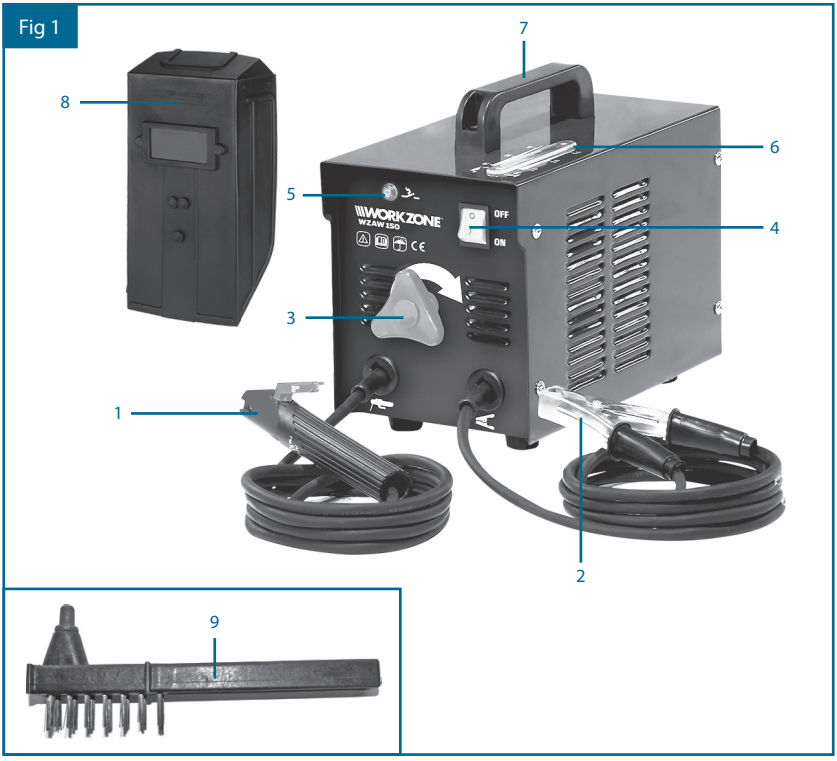

Fig 2

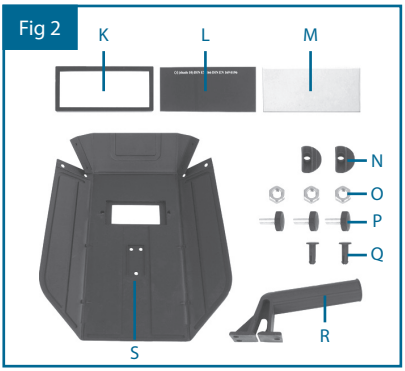

Fig 3

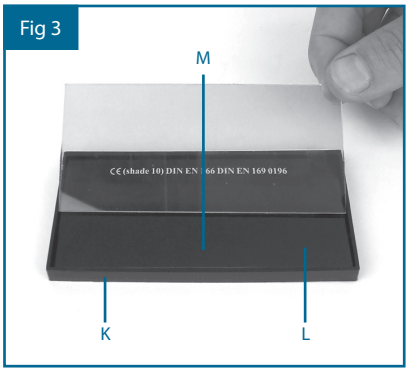

Assembly and Parts List

Fig 4

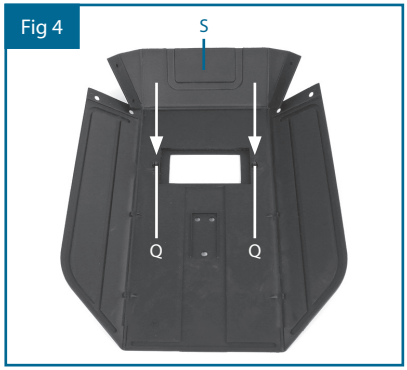

Fig 5

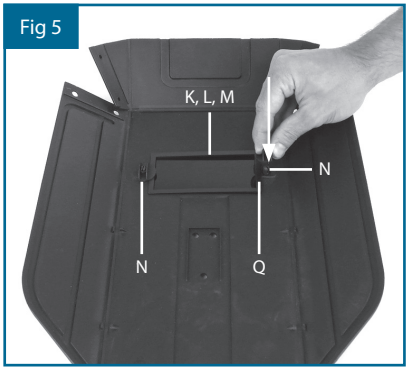

Fig 6

Fig 7

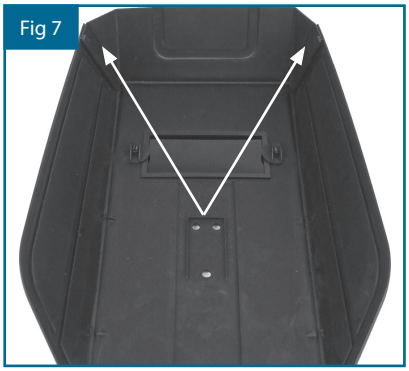

Fig 8

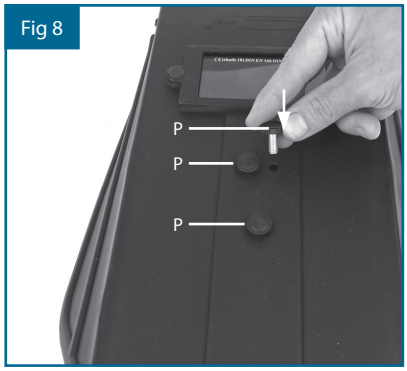

Fig 9

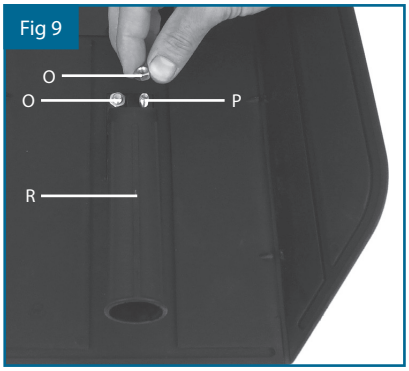

Getting Started

4

Layout (Fig. 1/2)

1. Electrode holder
2. Earth terminal
3. Adjustment wheel for welding current
4. ON/OFF switch
5. Control lamp for overheating
6. Welding current scale
7. Carry handle
8. Face shield
9. 2 in 1 wire brush / chipping hammer

K. Safety glass frame
L. Welding glass
M. Safety glass
N. Safety glass retaining bushes
O. Nuts for handle
P. Screws for handle
Q. Safety glass retaining pins
R. Handle
S. Face shield frame

Items supplied (Fig. 1/2)

1. Welding set
2. Face shield parts
3. State 2 in 1 wire brush / chipping hammer

Welding preparations

Connect the earth terminal (-) (2) direct to the part to be welded or to the support on which the part is resting. Ensure that the earth terminal (-) is in direct contact with the part to be welded. You should therefore avoid coated surfaces and/or insulated materials. The electrode holder cable has a special clamp at one end, which is used to secure the electrode.
The face shield must be used at all times for welding. It protects your eyes from the radiation emitted by the arc and nevertheless enables you to watch the welding process.

Assembling the face shield (Fig. 3-9)

- Place the welding glass (l) and the transparent safety glass (m) over it in the frame for the safety glass (k) (Fig. 3).
- Press the safety glass retaining pins (q) into the holes in face shield frame (s) from the outside (Fig. 4).
- Place the frame for the safety glass (k) with the welding glass (l) and transparent safety glass (m) from the inside into the recess in the welding frame (s), press the safety glass retaining bushes (n) onto the safety glass retaining pins (q) until they engage to secure the frame for the safety glass (k). The transparent safety glass (m) must be on the outside (Fig. 5).
- Bend the top of the face shield frame (s) inwards (Fig. 6/1) and fold down the top corners (Fig. 6/2). Now bend the outer sides of the face shield frame (s) inwards (Fig. 6/3) and connect them by pressing the top corners and outer sides together. When the retaining pins engage, you should be able to hear 2 clear clicks on each side (Fig. 6/4).
- When the top corners of the face shield are connected as shown in Figure 7, place the screws for the handle (p) from the outside through the three holes in the face shield (Fig. 8).
- Turn over the face shield and place the handle (r) over the threads on the three screws for the handle (p). Secure the handle (r) to the face shield using the three nuts for the handle (o) (Fig. 9).

Technical data

Mains connection			230 V ~ 50 Hz
Welding current (A) at COS Φ = 0.73:			40 - 80
ø (mm)	1.6	2.0	2.5
I_2	40	55	80
t_w (s)	217	116	64
t_r (s)	1450	1381	1351
Idling voltage (V):			48
Power input:			4 kVA at 80 A COS Φ = 0.73
Fuse (A):			13

The welding times apply for an ambient temperature of 40°C electrical connections for the power supply

Spare parts and consumables


1592700


1592500


1593400


157522001069


154905003800


1584210


1593500


1593600

Welding Electrodes
Ø1.6 x 250mm,
25 pcs

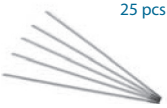
1591312

Welding Electrodes
Ø2.5 x 350mm,
25 pcs


1591420

Welding Electrodes
Ø2.5 x 350mm,
100 pcs

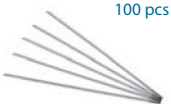
1591736

Welding Electrode
Ø2 x 300 + Ø2.5 x 350,
60 pcs

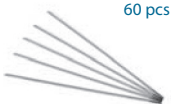
1591100

Introduction to practical welding

After you have made all the electrical connections for the power supply and for the welding circuit, you can proceed as follows: Insert the unsheathed end of the electrode into the electrode holder (1) and connect the earth terminal (-) (2) to the part you wish to weld. Ensure that a good electric contact is made. Switch on the welding set at the switch (4) and set the welding current using the hand wheel (3) to suit the electrode you wish to use. Hold the safety shield in front of your face and rub the tip of the electrode on the part you wish to weld as if you were striking a match. This is the best method of igniting the arc. Check that you have the correct electrode and current strength on a test part.

Electrode (Ø mm):	Welding current (A)
1.6	40 A
2	40 - 80 A
2.5	60 - 100 A

IMPORTANT: Do not dab the workpiece with the electrode since it could be damaged, making it more difficult to ignite the arc.

As soon as the arc has ignited, attempt to keep it a distance from the workpiece equivalent to the diameter of the electrode.

This distance should be kept as constant as possible during the welding process. The angle of the electrode in the direction in which you are working should be 20°/30°.

IMPORTANT: Always use tongs or pliers to remove spent electrodes and to move parts that you have just welded. Please note that the electrode holder (1) must always be put down so that it is insulated after you have completed the welding work.

Do not remove the slag until the weld has cooled. If you want to continue a weld after an interruption, the slag from your initial attempt must first be removed.

- The welding point on the workpiece should be free of rust and paint. Choose the appropriate electrode according to the size and material of the workpiece.
- For beginners, the first difficulty is priming the arc. For best results proceed as follows:
  - Test the current intensity and the electrode on a piece of scrap material.
  - Hold the electrode approximately 2 cm above the start of the joint and hold the face shield in front of your face. Touch the workpiece with the electrode and stroke it repeatedly on and off the workpiece to start the arc, as if you were striking a match. It may occur that the breakaway movement of the electrode is not quick enough, which can mean that the electrode sticks to the workpiece. Remove the electrode with a firm lateral jerk. (If this does not work, release the electrode from the clamp on the electrode holder, then use pliers or tongs to remove the electrode from the workpiece).
  - Watch the arc through the lens in the face shield and keep the arc length approximately 1 – 1.5 times the diameter of the electrode. The arc length is very important as it has an influence on the welding current and welding voltage.
  - Incorrect current intensity produces a poor quality, weak joint.
  - Hold the electrode at an angle approximately 70° – 80° to the workpiece in the direction of advancement. If the angle is too large, the slag can penetrate the joint; if the angle is too small, the arc flutters and sprays molten metal. In both cases, a weak, porous joint is produced.
  - Ensure that the arc length remains constant by feeding the electrode continuously towards the workpiece as you progress down the joint. At the end of the joint; pull the electrode gently downwards away from joint to avoid producing a porous end crater.
  - Wait until the joint has cooled completely before removing the slag. If you wish to continue welding a joint after taking a break, the slag at the end of the joint must be removed first. Prime the arc in the joint and melt the electrode at the point where the two joints meet.

CAUTION: Always use tongs, pliers or a similar tool to remove used, hot electrodes or to move hot welded workpieces. Ensure that the electrode holder is placed on an insulated surface when taking a break. Always turn off the welder after finishing work and during breaks, and always disconnect the machine from the mains.

Welding

- Proceed as follows after connecting the electrical connections as described:
  - Hold down the lever on the electrode holder and slide the uncovered part of the electrode into the electrode holder.
  - Clamp the earth cable to the workpiece. Ensure that a good electrical connection exists between the workpiece and the earth clamp.
  - Switch the machine on and adjust the welding current with the hand wheel. The welding current must be selected according to the size of the workpiece and the type of electrode.
  - Hold the face shield in front of your face and strike the tip of the electrode on the workpiece as if you were lighting a match. This is the best method to start the arc.

    CAUTION: Do not bang the electrode on the workpiece as this could damage the electrode covering, making it more difficult to prime the arc.

  - As soon as you have started the arc, try to keep the arc length constant. The arc length should be approximately 1 - 1.5 times the diameter of the electrode. The arc length should be kept as constant as possible. Hold the electrode at an angle approximately 70° - 80° to the workpiece.

Weld seam

Appearance as a function of current intensity:

Arc too short:

When the arc is too short, irregular masses of welded metal with inclusions of slag are produced.

Arc too long:

A long arc causes poor penetration in the base metals, bubbles and sprays of molten metal. A defective joint can be produced.

Appearance as a function of advancement speed:

Advancement speed too low:

Causes a wide deposit and inferior length. Leads to unnecessarily high electrode consumption and loss of working time.

Advancement speed too high:

Leads to insufficient penetration of the base material, a narrow and high seam and large deposits of slag which can be difficult to remove.

Appearance as a function of current intensity:

Current intensity too low:
Poor penetration, easy sticking, a very irregular cord, difficulty removing slag.

Current intensity too high:
Very wide cord with excessive penetration of the base material sprays of molten metal and a deep crater. High current intensity can also cause minor breakages within the material.

High quality weld:
Working with the correct arc length, advancement speed, current intensity and inclination of the electrode produces a regular cord, a fine mesh and a joint free of porosity and slag inclusions.

Joints

There are two fundamental types of welding joint: Butt joints and angle joints (outer corner, inner corner and superimposition).

Butt joints

When welding a butt joint with material up to 2 mm thick, the entire faces of the material must be in contact with each other. For thicker materials, use 'Table A' as a guide.

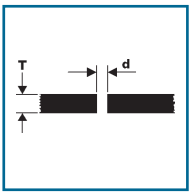

Table A

	T =	2 – 3 mm	3 – 4 mm	4 – 5 mm
Horizontal workpiece	d =	0.5 – 1.5 mm	1.5 – 2.5 mm	2 – 3 mm
Face	d =	1 – 2 mm	2 –3 mm	3 – 4 mm
Vertical workpiece	d =	1 – 1.5 mm	1.5 – 2.5 mm	2 – 3 mm

External corner joints

This joint is very simple to achieve, but is not practical for materials thicker than 10 mm. For materials thicker than 10 mm, we recommend preparing a joint as illustrated in figure 10.

Fig 10

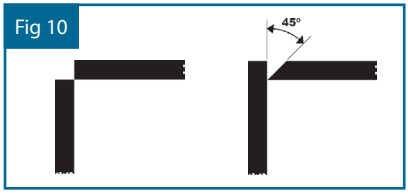

Internal corner joint

This joint is very simple to achieve, and is used for materials with a maximum thickness of 10 mm. The value of 'd' (see illustration) should be kept to a minimum and should always be less than 2 mm.

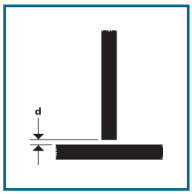

Overlap joints

The most common preparation is with right angle edges; the weld is completed with a standard angle weld. The materials must be as close together as possible.

Flat butt joints

The weld must be performed in a single operation with sufficient penetration of the base material. For this reason it is important to prepare well.

- The factors which affect the quality of the weld are as follows: the current intensity, the distance between the edges of the materials to be welded, the inclination of the electrode and the diameter of the electrode.
- The electrode should be inclined at approximately 45° / 55° to the horizontal plane going through the axis of the weld. Keep in mind that increasing the inclination increases the penetration and vice versa.

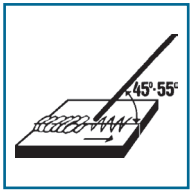

- To prevent or reduce deformation which can arise during solidification of the material it is advisable, wherever possible, to fix the workpieces in a clamping device or similar which exerts force in the opposite direction of the expected contraction or deformation.
- Avoid stiffening of the welded structure to prevent breakages in weld. These difficulties can be reduced, if it is possible to rotate the workpiece so that the structure can be welded in two opposite places. In this case the electrode must be kept inclined at 50° / 70° to the vertical axis going through the joint. Advance steadily with a light cross oscillation.

Vertical butt joints

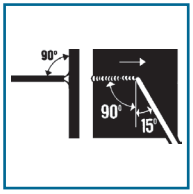

Up to a material thickness of 4 mm it is not necessary to bevel the face of the workpiece. Keep the electrode at 90° + 15°, as shown in the illustration, when welding the joint. The current intensity should be set to the same level as for a similar job on a level surface.

Horizontal butt joints

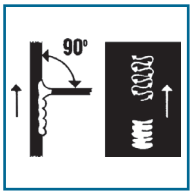

Up to a thickness of approximately 4 mm it is not necessary to prepare a junction. The welding technique used can be descendant, used for thinner workpieces, or ascendant for general use. Keep the electrode on a perpendicular plane with an inclination of 90° - 120° to the axis of the joint. Move the electrode in a U shape across the join, emphasising the bottom of the U. When the molten metal is too hot, move the electrode upwards. The current intensity for this type of joint can in general be set 10 - 15% lower than the current intensity required for similar jobs on a flat surface. To achieve good penetration and a correct weld it is necessary to repeat the procedure on the opposite side of the structure.

Overhead butt joints

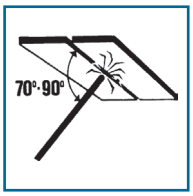

It is indispensable to set the current intensity so that a highly fluid bath is not produced, the current must however be sufficient to permit good penetration of the base materials. The electrode must be kept vertical with an inclination of 70° - 90° in the direction of advancement and moved lightly from side-to side. The arc must be kept very short and, if necessary, make quick jumps forward to ensure that the bath has time to solidify.

Corner joints

Joints on a flat surface

If the workpiece is of a manageable size, it should be arranged as shown in the illustration. If the workpiece is cumbersome and cannot be easily rotated, carry out the weld in such a way that cross movements are avoided. Hold the electrode at 40° - 50° in the direction of advancement and at 30° - 40° to the horizontal plane.

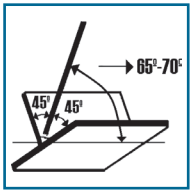

Vertical joints

The same rules apply to welding vertical corner joints as apply to vertical butt joints. The current intensity should be increased by approximately 10% however.

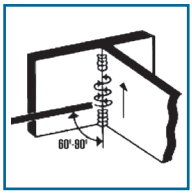

Overheating guard

The welding set is fitted with an overheating guard that protects the welding transformer from overheating. If the overheating guard trips, the control lamp (5) on your set will be lit. Allow the welding set to cool for a time.

Transport

Before transporting the welder you must first disconnect the power plug and remove the ground terminal from the workpiece. Then wind up the cable properly. Now you can carry the welder to a different place by the carry handle (1).

Storage

Store the equipment and accessories out of children's reach in a dark and dry place at above freezing temperature. The ideal storage temperature is between 5°C and 30°C. Store the electric tool in its original packaging.

Circuit diagram - Additional Illustration

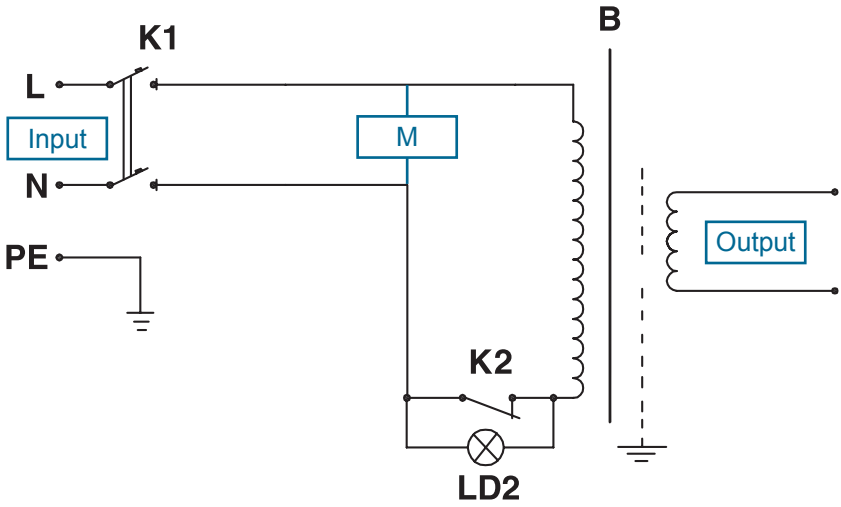

Maintenance

Remove dust and dirt from the equipment at regular intervals. Cleaning is best carried out with a fine brush or a cloth.

Ordering spare parts

Please quote the following data when ordering replacement parts:

- Type of machine: WZAW 150
- Article number of the machine: 15.440.62
- Identification number of the machine: 11013
- Replacement part number of the part required For our latest prices and information please go to www.einhell.co.uk

Disposal and recycling

The equipment is supplied in packaging to prevent it from being damaged in transit. The raw materials in this packaging can be reused or recycled. The equipment and its accessories are made of various types of material, such as metal and plastic. Defective components must be disposed of as special waste. Ask your dealer or your local council.

The unit and its accessories are made of various types of material, such as metal and plastic. Defective components must be disposed of as special waste. Ask your dealer or your local council.

For EU countries only

Never place any electric tools in your household refuse.

To comply with European Directive 2002/96/EC concerning old electric and electronic equipment and its implementation in national laws, old electric tools have to be separated from other waste and disposed of in an environment-friendly fashion, e.g. by taking to a recycling depot.

Recycling alternative to the demand to return electrical devices:

As an alternative to returning the electrical device, the owner is obliged to cooperate in ensuring that the device is properly recycled if ownership is relinquished. This can also be done by handing over the used device to a returns centre, which will dispose of it in accordance with national commercial and industrial waste management legislation. This does not apply to the accessories and auxiliary equipment without any electrical components which are included with the used device.

Einhell Germany AG · Wiesenweg 22 · D-94405 Landau/Isar

Declaration of Conformity

(D) erklärt folgende Konformität gemäß EU-Richtlinie und Normen für Artikel
(GB) explains the following conformity according to EU directives and norms for the following product
(F) déclare la conformité suivante selon la directive CE et les normes concernant l'article
(I) dichiara la seguente conformità secondo la direttiva UE e le norme per l'articolo
(NL) verklaart de volgende overeenstemming conform EU richtlijn en normen voor het product
(E) declara la siguiente conformidad a tenor de la directiva y normas de la UE para el artículo
(P) declara a seguinte conformidade, de acordo com a directiva CE e normas para o artigo
(DK) attesterer følgende overensstemmelse i medfør af EU-direktiv samt standarder for artikel
(S) förklarar följande överensstämmelse enl. EU-direktiv och standarder för artikeln
(FIN) vakuuttaa, että tuote täyttää EU-direktiivin ja standardien vaatimukset
(EE) tõendab toote vastavust EL direktiivile ja standarditele
(CZ) vydává následující prohlášení o shodě podle směrnice EU a norem pro výrobek
(SLO) potrjuje sledečo skladnost s smernico EU in standardi za izdelek
(SK) vydáva nasledujúce prehlásenie o zhode podľa smernice EU a noriem pre výrobok
(H) a cikkekhez az EU-irányvonal és Normák szerint a következő konformitást jelenti ki
(PL) deklaruje zgodność wymienionego poniżej artykułu z następującymi normami na podstawie dyrektywy WE.
(BG) декларира съответното съответствие съгласно Директива на ЕС и норми за артикул
(LV) paskaidro šādu atbilstību ES direktīvai un standartiem
(LT) apibūdina šį atitikimą EU reikalavimams ir prekės normoms
(RO) declară următoarea conformitate conform directivei UE şi normelor pentru articolul
(GR) δηλώνει την ακόλουθη συμμόρφωση σύμφωνα με την Οδηγία ΕΚ και τα πρότυπα για το προϊόν
(HR) potvrđuje sljedeću usklađenost prema smjernicama EU i normama za artikl
(BIH) potvrđuje sljedeću usklađenost prema smjernicama EU i normama za artikl
(RS) potvrđuje sledeću usklađenost prema smernicama EZ i normama za artikal
(MK) следующим удостоверяется, что следующие продукты соответствуют директивам и нормам ЕС
(UKR) проголошує про зазначену нижче відповідність виробу директивам та стандартам ЄС на виріб
(MK) ја изјавува следната сообрзност согласно ЕУ-директивата и нормите за артикли
(TR) Ürünü ile ilgili AB direktifleri ve normları gereğince aşağıda açıklanan uygunluğu belirtir
(N) erklærer følgende samsvar i henhold til EU-direktivet og standarder for artikkel
(IS) Lýsir uppfyllingu EU-reglna og annarra staðla vöru

Arc Welder WZAW 150 (Workzone)

- [ ] 87/404/EC_2009/105/EC
- [ ] 2005/32/EC_2009/125/EC
- [x] 2006/95/EC
- [ ] 2006/28/EC
- [x] 2004/108/EC
- [ ] 2004/22/EC
- [ ] 1999/5/EC
- [ ] 97/23/EC
- [ ] 90/396/EC_2009/142/EC
- [ ] 89/686/EC_96/58/EC
- [x] 2011/65/EC

- [ ] 2006/42/EC
  - [ ] Annex IV
    Notified Body:
    Notified Body No.:
    Reg. No.:
- [ ] 2000/14/EC_2005/88/EC
  - [ ] Annex V
  - [ ] Annex VI
    Noise: measured L_{WA} = dB (A); guaranteed L_{WA} = dB (A)
    P = KW; L/Ø = cm
    Notified Body:
- [ ] 2004/26/EC
  Emission No.:

Standard references: EN 60974-1; EN 60974-6; EN 60974-10

Landau/Isar, den 30.04.2013

Weichselgartner/General-Manager

Schunk/Product-Management

First CE: 06
Art.-No.: 15.440.62 **I.-No.:** 11013
Subject to change without notice

Archive-File/Record: NAPR007900
Documents registrar: Protschka Daniel
Wiesenweg 22, D-94405 Landau/Isar

How do I claim for a warranty matter?	1. Fill in the Warranty card and send to the Einhell UK Ltd Address. 2. Contact Einhell UK Ltd, using one of the Telephone numbers for AFTER SALES SUPPORT. 3. Or contact via the Einhell UK Ltd website.
How do I obtain spare parts (not covered by the warranty)?	Make sure you have the information from the product data label, or page 26 of this user guide, and then: 1. Contact Einhell UK Ltd, using one of the Telephone numbers for AFTER SALES SUPPORT, and choose the option for Spare Parts. 2. Or contact via the Einhell UK Ltd website, where spares information & prices are available.
What do I do if I accidentally cut the mains cable?	To avoid danger, get an electrician or suitably qualified person to: 1. Fit a waterproof connector to re-join the cable. 2. Or replace the mains cable into the unit.

Warranty Card

8

WORKZONE®

ARC WELDER

Your details:

Name _____

Address _____

_____

_____

☎ _____ **Email** _____

Date of purchase* _____

***We recommend you keep the receipt with this warranty card**

Location of purchase _____

Description of malfunction:

Return your completed warranty card to:

Unit 9, Stadium Court
Wirral International Business Park
Plantation Road
Bromborough
Wirral
CH62 3QG

www.einhell.co.uk/warranty

AFTER SALES SUPPORT

☎ GB 0151 649 1500
IRL 1890 946 244

www.einhell.co.uk

MODEL: WZAW 150, 10/2013

Monday to Thursday 8:45am - 5pm,
Friday 8:45am - 3pm.

3
YEAR WARRANTY