GARDENLINE®

# 2 in 1 Petrol Grass Trimmer/Brush Cutter

## Operating Instructions - User Guide

## After Sales Support

Now you have purchased a Gardenline® product you can rest assured in the knowledge that as well as your 3 year parts and labour guarantee you have the added peace of mind of dedicated helplines and web support.

**AFTER SALES SUPPORT**

GB 0151 649 1500
IRE 1890 946244
www.einhell.co.uk

MODEL: GLBC 43

# Contents


| Page | |
|---|---|
| 3 | Welcome |
| 4-8 | General Information and Safety Instructions |
| 9-19 | Assembly and Parts List |
| 20 | Features |
| 21-31 | Instructions |
| 32-36 | Useful information |
| 37 | FAQ |
| 39 | Warranty Card |



The reprinting or reproduction by any other means, in whole or in part, of documentation and papers accompanying products is permitted only with the express consent of Einhell UK Ltd.

Subject to technical changes.

## Congratulations!

You have made an excellent choice with the purchase of this quality Gardenline® product.

By doing so you now have the assurance and peace of mind which comes from purchasing a product that has been manufactured to the highest standards of performance and safety, supported by the high quality standards of ALDI.

We want you to be completely satisfied with your purchase so this Gardenline® product is backed by a comprehensive manufacturer's 3 year warranty and an outstanding after sales service through our dedicated Helpline.

We hope you will enjoy using your purchase for many years to come.

If you require technical support or in the unlikely event that your purchase is faulty please telephone our Helpline for immediate assistance. Faulty product claims made within the 3 year warranty period will be repaired or replaced free of charge provided that you have satisfactory proof of purchase (keep your till receipt safe!). This does not affect your statutory rights. However, be aware that the warranty will become null and void if the product is found to have been deliberately damaged, misused or disassembled.

## General safety regulations for the 2 in 1 Petrol Grass Trimmer/Brush Cutter

**IMPORTANT!**
**Read and follow the operating instructions and safety information before using for the first time.**

**When using equipment, a few safety precautions must be observed to avoid injuries and damage. Please read the complete operating manual with due care. Keep this manual in a safe place, so that the information is available at all times. If you give the equipment to any other person, give them these operating instructions as well. We accept no liability for damage or accidents which arise due to non-observance of these instructions and the safety information.**

- This equipment is not designed to be used by people (including children) with limited physical, sensory or mental capacities or those with no experience and/or knowledge unless they are supervised by a person who is responsible for their safety or they have received instructions from such a person in how to use the equipment safely.
- Children must always be supervised in order to ensure that they do not play with the equipment.
- Never allow other persons who are not familiar with the operating instructions to use the equipment. Contact your local governmental agency for information regarding minimum age requirements for the user.
- Never mow in the direct vicinity of persons - especially children or animals.

**CAUTION!**
**Maintain a safety distance of 15 m. If approached, switch off the equipment immediately. Always keep in mind that the user of the equipment is responsible for accidents involving other persons or their property.**

**IMPORTANT!**
**Danger of poisoning. Emissions, fuels and lubricants are toxic.**
**Do not inhale emissions.**

## Safety instructions for the 2 in 1 Petrol Grass Trimmer/Brush Cutter

**CAUTION!**
**Read all safety regulations and instructions. Any errors made in following the safety regulations and instructions may result in fire and/or serious injury. Keep all safety regulations and instructions in a safe place for future use.**

## Safety devices

When working with the equipment, the appropriate plastic guard hood for the cutting blade mode or cutting line mode must be fitted to prevent objects being thrown out by the equipment. The integrated blade in the cutting line guard hood automatically cuts the line to the optimum length.

## Before using

- Always wear sturdy, non-slip footwear and long trousers when using the 2 in 1 Petrol Grass Trimmer/Brush Cutter. Never mow barefoot or in sandals.
- Check the ground on which the equipment will be used and remove all objects that could be caught up and catapulted away.

**CAUTION!**
**Petrol is highly flammable! Therefore:**

- **Only store petrol in containers designed to hold petroleum-based liquids.**
- **Only refuel out in the open and do not smoke during the refuelling process.**
- **Always refuel before starting the engine. Do not open the fuel tank cap and do not refuel while the engine is running or when the equipment is hot.**
- **If petrol has overflowed, do not under any circumstances attempt to start the engine. Instead, remove the equipment from the affected area. Avoid starting the engine until the petrol fumes have completely evaporated.**
- **For safety reasons, the petrol tank and the tank cap must be replaced if they are damaged.**

- Replace defective silencers.
- Before using the 2 in 1 Petrol Grass Trimmer/Brush Cutter, visually inspect it to ensure that the blade, mounting bolts and the entire cutting apparatus are in good working order (i.e. not worn out or damaged). To prevent any imbalance, replace worn out or damaged blades and mounting bolts as a set only (if applicable).

## Handling

### Operation, storage and monitoring

- Wear close-fitting work clothing which is in good condition and which offers protection, such as long trousers, sturdy work shoes, hard-wearing gloves, a helmet, a face mask or goggles to protect your eyes, and good quality ear defenders to reduce the noise.
- Store the equipment in a safe place. Open the petrol tank cap slowly to release any pressure that may have formed in the petrol tank. To prevent the risk of fire, move at least 3 metres from the refueling area before you start the equipment.
- Switch off the equipment before you put it down.
- Always hold the equipment firmly in both hands. Your fingers and thumbs should be wrapped around the handles.
- Ensure that all screws and connecting elements are secure. Never use the equipment if it has not been properly adjusted or has not been fully or safely assembled.
- Make sure that the handles are clean and dry and that there is no petrol mixture on them.
- Set the line spool to the required height. Avoid touching small objects such as stones with the line spool.
- When carrying out cutting work on a slope always stand at a lower level than the cutting tool. Never cut or trim on a smooth, slippery hill or slope.
- Keep all parts of your body and items of clothing away from the line spool when you start the engine and when the engine is running. Before you start the engine ensure that the line spool will not strike an obstacle.
- Always switch off the engine before working on the cutting tool.
- Store the equipment and accessories in a safe place protected from naked flames and heat/ spark sources such as gas heaters, tumble driers, oil stoves or portable radiators, etc.
- Keep the guard hood, line spool and engine clear of cut debris at all times.
- Only adequately trained people and adults may use, adjust and maintain the equipment.
- If you are not familiar with the equipment, practice handling it with the engine off.
- Always check the site you want to cut before you begin your work. Solid objects such as pieces of metal, bottles, stones, etc. can be catapulted away and cause serious injuries and permanent damage to the equipment. If you touch a solid object with the equipment by mistake, switch off the engine immediately and check the equipment for signs of damage. Never use the equipment if it is damaged or defective.

- Always operate the equipment in its high speed range for trimming and cutting. Do not let the engine run at low speed at the start of cutting or during trimming work.
- Only use the equipment for the purpose for which it is intended, such as trimming and cutting weeds.
- Never hold the line spool above knee height when the equipment is in operation.
- Do not use the equipment if other people or animals are in the immediate vicinity. Keep a minimum distance of 15 m between yourself and other people or animals when cutting. Keep a distance of 30 m if you are cutting down to the ground.

## Additional instructions

- Do not use any fuel other than that recommended in the operating instructions. Always follow the instructions in the section 'Fuel and oil' on page 18. Do not use petrol that has not been mixed correctly with 2-stroke oil. Otherwise there is a risk of causing permanent damage to the engine and of voiding the manufacturer's guarantee.
- Do not smoke while refuelling or using the equipment.
- Never use the equipment without the exhaust pipe.
- Do not touch the exhaust pipe with your hands or body. Hold the equipment so that your fingers and thumbs are wrapped around the handle.
- Do not use the equipment in an uncomfortable posture, off balance or with extended arms or with only one hand. Always use both hands on the equipment and wrap your fingers and thumbs around the handles.
- Always keep the line spool on the ground whilst the equipment is in operation.
- Use the equipment only for the purpose for which it is intended, such as trimming and cutting weeds.
- Do not use the equipment over a extended periods of time - take regular breaks.
- Do not use the equipment when under the influence of alcohol or drugs.
- Use the equipment only when the guard hood is fitted and in good working order.
- Any modifications to the product may place your personal safety at risk and cause the manufacturer's warranty to be voided.
- Never use the equipment near inflammable liquids or gases, neither in enclosed rooms nor outdoors. This may cause explosions and/or fire.
- Do not use any other cutting tools. For your own safety you must use only the accessories and attachments which are listed in the operating instructions or which are recommended or specified by the manufacturer. The use of cutting tools or accessories other than those recommended in the operating instructions or catalog may place your personal safety at risk.

## Safety precautions for handling the blade

- Take note of all warnings and instructions relating to operating and fitting the blade.
- The blade can recoil suddenly from objects if it cannot cut through them. This can cause injuries to the arms or legs. Keep bystanders and animals at least 15 m away from where you are working. If the equipment strikes a foreign body, stop the engine immediately and wait for the blade to come to a standstill. Check the blade for signs of damage. Always replace the blade if it is bent or cracked.
- The blade is liable to catapult away objects with high force. This can cause serious injuries. Wear protection on your eyes, face and legs. Always remove objects from your working area before you use the brush cutter.
- Carefully check the equipment and its fittings for signs of damage every time before use. Do not use the equipment unless all the blade fittings are installed correctly.
- When you release the throttle lever, the blade will continue to rotate and will only gradually come to a standstill. A blade which is in the process of rotating to a standstill can cause you or bystanders injuries through cutting. Before you start any work on the blade, switch off the engine and ensure that the blade has come to a standstill.
- The danger zone has a radius of 15 metres. Bystanders may suffer blindness or injuries. Keep a distance of 15 metres between yourself and other people or animals.

## Layout (see Fig. 1-13)

1 Connecting piece for long handle
2 Long handle
3 Steady grip
4 Starter line / starter cable
5 Choke lever
6 Petrol tank
7 Fuel pump 'primer'
8 Air filter housing cover
9 On/Off switch
10 Throttle lever lock
11 Throttle lever
12 Throttle lock
13 Line spool with cutting line
14 Cutting line guard hood
15 Cutting blade guard hood
16 Screw M5 (4x)
17 Carrying strap
18a Cutting blade (4 teeth)
18b Cutting blade (3 teeth)
19 Holder for steady grip
20 Handle screw M8
21 Washer Ø 8mm
22 Carrier plate
23 Pressure plate
24 Pressure plate cover
25 Nut M10 (left-hand thread)
26 Oil/petrol mixing bottle
27 Spark plug wrench
28 Open-ended wrench 8/10 mm
29 Hex wrench 4 mm
30 Hex wrench 5 mm
31 Protective cap for spark boot plug
32 Handle screw M6
33 Nut M6
34 Washer Ø 6mm
35 Air filter
36 Spark plug boot

The cutting blade (18a/18b) and the line spool (13) are jontly referred to in the text as the cutting tool (generic term).

## Items supplied

- Open the packaging and take out the equipment with care.
- Remove the packaging material and any packaging and/or transportation braces (if provided).
- Check to see if all items are supplied.
- Inspect the equipment and accessories for transport damage.
- If possible, please keep the packaging.

**IMPORTANT!**
**The equipment and packaging material are not toys. Do not let children play with plastic bags, foils or small parts. There is a danger of swallowing or suffocating!**

## Intended Use

The equipment (cutting blade mode) is designed for cutting high grass and sparse scrub with the 4-tooth blade and for cutting dense scrub and slender wood growth with the 3-tooth blade. The equipment (line spool mode) is designed for cutting lawns and small weeds. The operating instructions as supplied by the manufacturer must be obeyed to ensure that the equipment is used properly.

Any use which is not expressly permitted in these instructions may result in damage to the equipment and place the user in serious danger. Be sure to observe the restrictions in the safety information.

Please note that our equipment has not been designed for use in commercial, trade or industrial applications. Our warranty will be voided if the equipment is used in commercial, trade or industrial businesses or for equivalent purposes.

**CAUTION!**
**Due to the high risk of physical injury to the user, the equipment must not be used to carry out the following work: to clean dirt and debris off walkways, or to chop up tree or hedge clippings. Similarly, the equipment must not be used to level out high areas such as molehills. For safety reasons, the equipment is not allowed to be used as a drive unit for other tools of any kind.**

The equipment is allowed to be used only for its intended purpose. Any other use is deemed to be a case of misuse. The user/operator and not the manufacturer will be liable for any damage or injuries of any kind resulting from such misuse.

Fig. 1

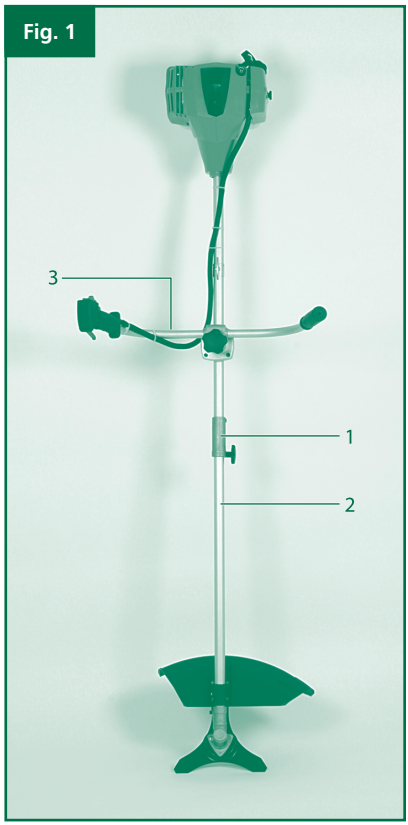


Fig. 1b

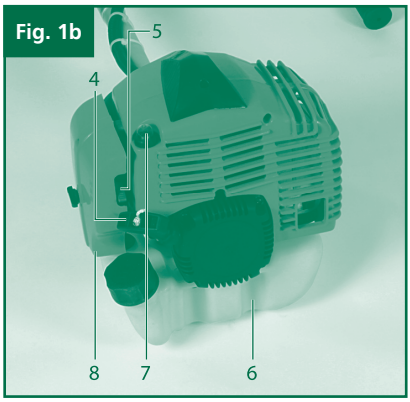


Fig. 1c

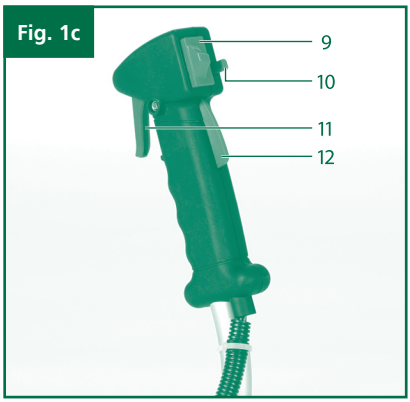


Fig. 2

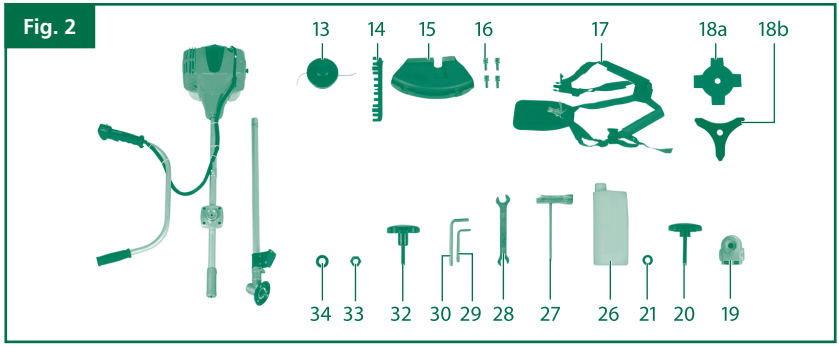

## Before starting the equipment

### 1 Fitting the steady grip (Fig. 3a-3c)

Fit the steady grip (3) as shown in Figures 3a-3c. Do not tighten the screw (Fig./Item 20) until you have set the optimum working position with the carrying strap (Fig.2/Item 17) (see also under 'Setting the cutting height' on page 17). The steady grip should be aligned as shown in Figure 1. To dismantle, proceed in reverse order.

Fig. 3a

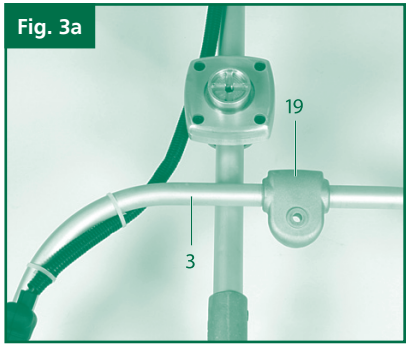


Fig. 3b

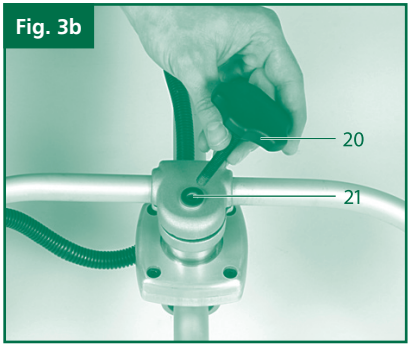


Fig. 3c

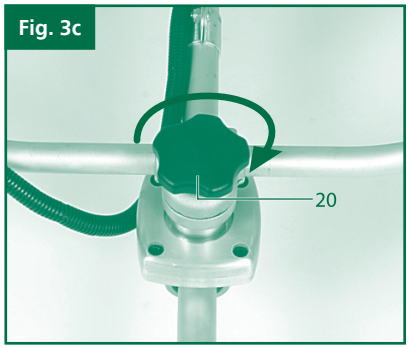


Fig. 4a

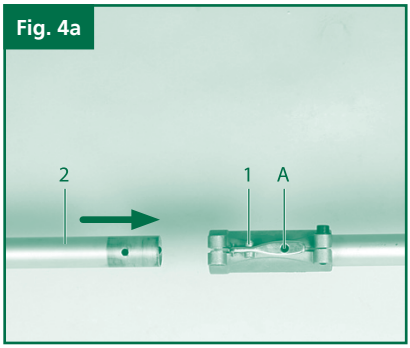


### 2 Fitting the long handle (Fig. 4a-4c)

Pass the handle screw (Fig.2/Item 32) through the washer (Fig.2/Item 34) and into the connecting piece of the long handle (1). Secure the handle screw loosely with the nut (Fig.2/Item 33). Now press the locking lever (A) and push the long handle (Fig. 4a/ Item 2) carefully into the connecting piece for the long handle. While doing so, ensure that the drive shafts on the inside of the long handle slide into each other (turn the line spool (13) / cutting blade (Fig.2/Items 18a & 18b) gently if required). The lug of the locking lever (A) must latch into the hole (B). Now tighten the handle screw as shown in Figure 4c. To dismantle, simply slacken the handle screw and actuate the locking lever.

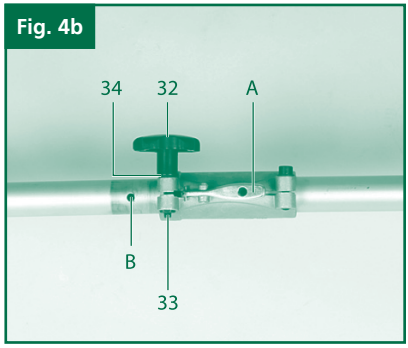

Fig. 4b

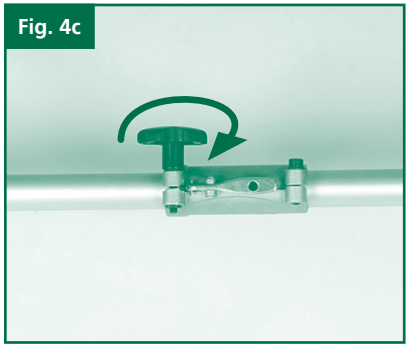
Fig. 4c

## 3 Fitting the blade guard hood

**IMPORTANT!**
**The cutting blade guard hood (15) must be fitted when you want to work with the cutting blade.**

- **The guard hood for the cutting blade must be installed as shown in Figures 5a-5b.**

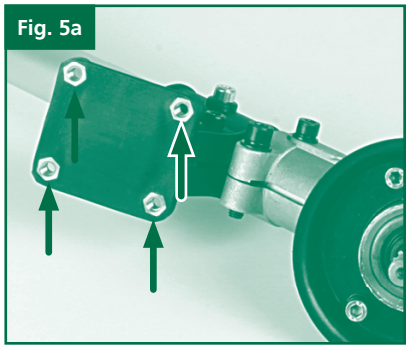
Fig. 5a

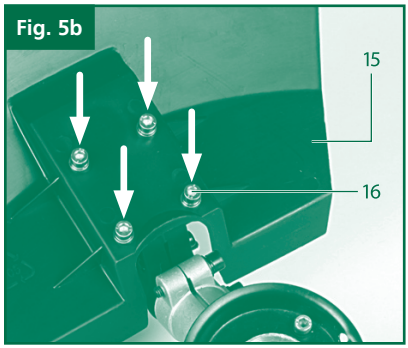

Fig. 5b

**4 Fitting/Replacing the cutting blade**

The procedure for fitting the cutting blade (18a/18b) is shown in Figures 6a-6g. To dismantle, proceed in reverse order.

- Fit the carrier plate (22) onto the spline shaft as shown in Figure 6b.
- Secure the cutting blade (18a/18b) on the carrier plate (Fig. 6c).
- Place the pressure plate (23) over the thread of the spline shaft (Fig. 6d).
- Place on the cover of the pressure plate (24) (Fig. 6e).
- Look for the hole in the carrier plate, line up with the notch underneath, lock with the supplied 4mm hex wrench (29), and then fit and tighten the nut (25) with the spark plug wrench (27) (Fig. 6f/6g). Important: Left-hand thread.
- The cutting blades (18a/18b) are delivered with plastic protective caps fitted to them. Remove these caps before use and refit them after use.

Fig. 6a

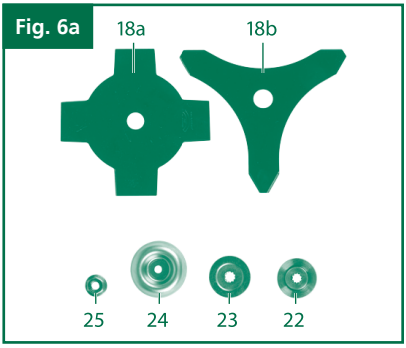


Fig. 6b

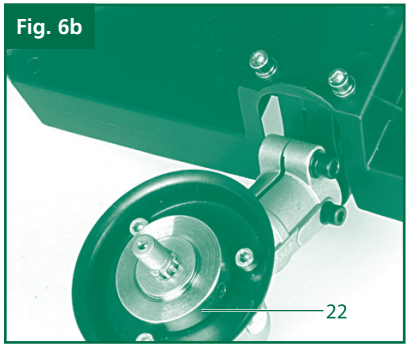


Fig. 6c

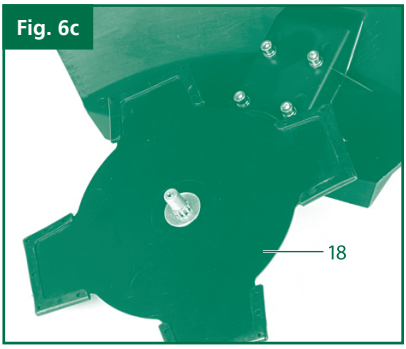


Fig. 6d

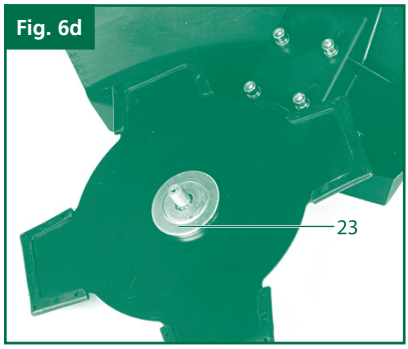

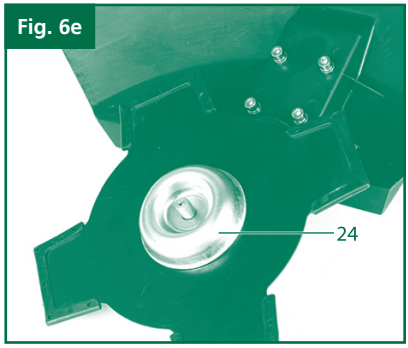


Fig. 6e

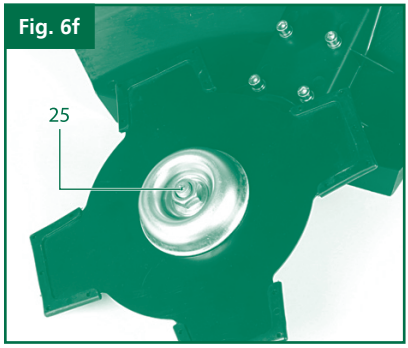


Fig. 6f

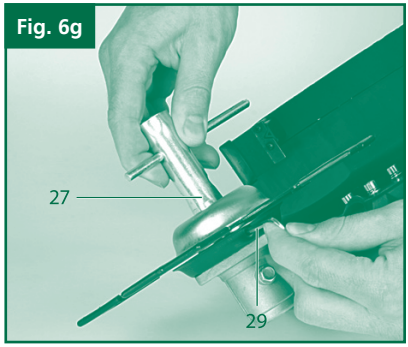


Fig. 6g

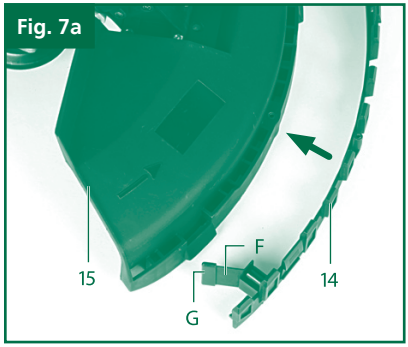


Fig. 7a

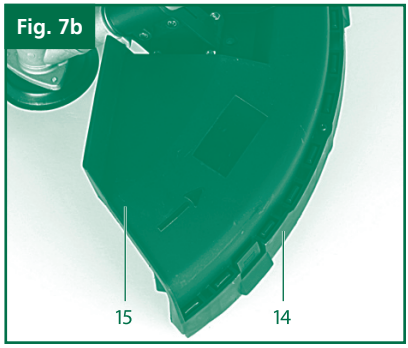


Fig. 7b

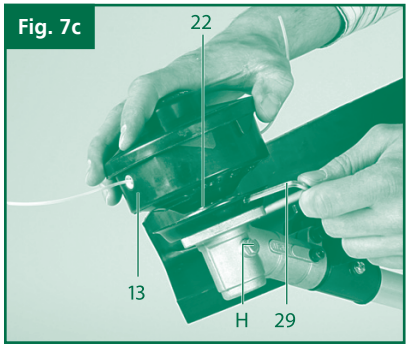


Fig. 7c

## 5 Fitting the cutting line guard hood on the cutting blade guard hood

**IMPORTANT!**
**The cutting blade guard hood (Fig.7b/Item 15) must be fitted when you want to work with the cutting blade.**

- The guard hood for the cutting line must be installed as shown in Figures 7a-7b. Make sure that the cutting line guard hood engages correctly.

  A blade (Fig. 7a/Item F) on the underside of the guard hood automatically cuts the cutting line to the optimum length. It is covered by a guard (Fig. 7a/Item G).

  Remove the cutting line guard (G) before you start working and replace it when you have finished working.

## 6 Fitting/Replacing the line spool

The procedure for fitting the line spool (13) is shown in Figure 7c. To dismantle, proceed in reverse order. The line spool is already fitted when the equipment is delivered.

**IMPORTANT!**
**Left-hand thread (i.e. Turn the spool clockwise to undo / release)**

Fig 7d, shows the semi-circular cut-out (U), in the rim of the gearbox end with the splined shaft, and also the the round hole (V) in the dished metal guard plate. The alignment of these is fixed.

Fig 7e, shows the Brass coloured carrier plate (22) with a splined hole, fitted to the splined shaft. This then rotates with the spindle, which has a threaded end.

There is a hole (W) in the side of the carrier plate (22), and this has to be rotated with the spindle, to align with the other 2 holes.

Look through this hole, and rotate the spool / spindle until all 3 locations are aligned, then fit the small 4mm hexagon key (29) through all 3 locations, thus locking the spindle, so the thread of the spool can be tightened / released. (See Fig. 7c.)

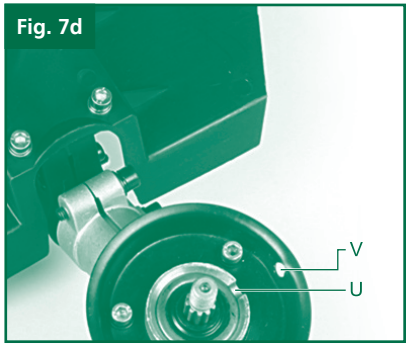

Fig. 7d

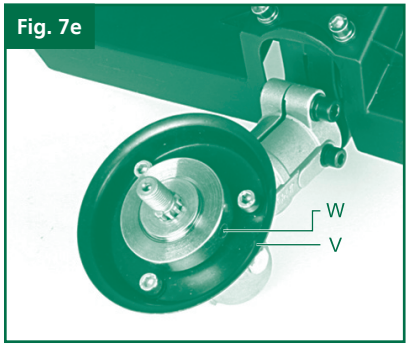

Fig. 7e

**7 Setting the cutting height**

- Fit the carrying strap (17) as shown in Figures 8a-8c.
- Hook the equipment to the carrying belt (Fig.8d).
- Adjust to the perfect working and cutting position using the various strap adjusters on the carrying strap (Fig. 8e).
- To confirm the optimum length of the carrying strap, make a few swinging movements with the engine off (Fig. 9a).

The carrying strap is fitted with a quick-release mechanism. Pull the red strap section (Fig. 8f) if you need to remove the strap quickly.

**IMPORTANT!**
**Always use the strap when working with the equipment. Attach the strap as soon as you have started the engine and it is running in idle mode. Switch off the engine before you take off the carrying strap.**

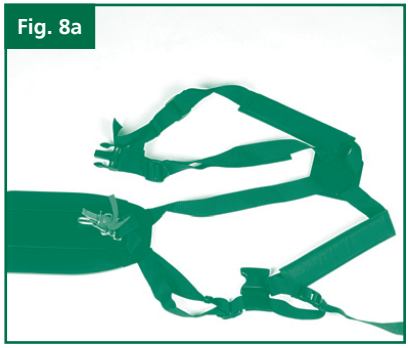
Fig. 8a

Fig. 8b

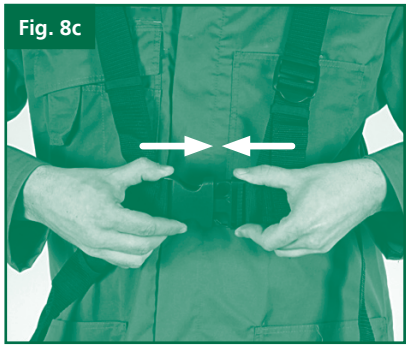
Fig. 8c

Fig. 8d

Fig. 8e

Fig. 8f

## 8 Fuel and oil – Recommended fuels

Use only a mixture of unleaded petrol and special 2-stroke engine oil.
Mix the fuel mixture as indicated in the fuel mixing table.

**IMPORTANT!**
**Do not use a fuel mixture which has been stored for longer than 90 days.**

**IMPORTANT!**
**Never use 2-stroke oil with a recommended mixing ratio of 100:1.
The manufacturer's warranty will be voided in case of engine damage due to inadequate lubrication.**

**IMPORTANT!**
**Only use containers designed and approved for the purpose to transport and store fuel. Pour the correct quantities of petrol and 2-stroke oil into the mixing bottle provided (see scale printed on the bottle). Then shake the bottle well.**

## 9 Fuel mixing table

Mixing Procedure: 40 parts petrol to 1 part oil

| Petrol | 2-stroke oil |
|---|---|
| 1 litre | 25 ml |
| 5 litres | 125 ml |

## Explanation of the warning signs on the equipment (see Fig. 14)

1) Warning!
2) Read the instructions before using for the first time!
3) Wear protective headgear, goggles and ear Defenders!
4) Wear sturdy, non-slip footwear!
5) Wear safety gloves!
6) Protect the equipment from rain and damp!
7) Be careful of objects being catapulted away!
8) Always switch off the equipment and disconnect the spark plug boot before carrying out any maintenance work!
9) The distance between the equipment and persons in the vicinity must be at least 15 m!
10) The cutting tool (blade/cutting line) continues to rotate after the machine is switched off!
11) Caution: Hot equipment parts. Keep your distance!
12) Add a little grease (gear grease) after every 20 hours of operation!
13) Note: Left-handed thread. Turn clockwise to undo the tool, turn counter-clockwise to tighten it.

Fig. 14

## Proper use

The 2 in 1 Petrol Grass Trimmer/Brush Cutter is to be used only for its prescribed purpose. Any other use is deemed to be a case of misuse. The user/operator and not the manufacturer will be liable for any damage or injuries of any kind caused as a result of this.

Please note that our equipment has not been designed for use in commercial, trade or industrial applications. Our warranty will be voided if the machine is used in commercial, trade or industrial businesses or for equivalent purposes.

## Operation

Please note that the statutory regulations governing noise abatement may differ from one location to another.

**Each time before use, check the following:**

- That there are no leaks in the fuel system.
- That the equipment is in perfect condition and that the safety devices and cutting devices are complete.
- That all screws are securely fastened.
- That all moving parts move smoothly.

**Starting the engine when cold**

Fill the tank with the oil/petrol mix. See also 'Fuel and oil'.

1. Set the equipment down on a hard, level surface.
2. Press the fuel pump (primer) (Fig. 1/Item 7) 10 times.
3. Move the On/Off switch (Fig. 1/Item 9) to 'I'.
4. Secure the throttle lever (Fig. 1 / Item 11). To do this, press the throttle lever lock (Fig. 1/Item 12) and then press the throttle lever (Fig. 1/Item 11) and lock the throttle lever by pressing the lock (Fig. 1/Item 10) at the same time.
5. Set the choke lever (Fig. 1/Item 5) to '⚲'.
6. Hold the equipment firmly and pull out the starter cable (Fig. 1/Item 4) until you feel it begin to resist. Then tug sharply on the starter cable 4 times. The equipment should start.

**IMPORTANT!**

**Never allow the starter line to snap back. This may result in damage.**

**IMPORTANT!**

**Since the throttle lever is secured, the cutting tool starts to operate immediately the engine is started.**

7 Then release the throttle lever by actuating it once. Actuating the throttle lever will also release the choke lever. (The engine returns to its idle state).

If the engine does not start up, repeat steps 4-6 above.

**PLEASE NOTE!**
**If the engine does not start up even after several attempts, read the section 'Troubleshooting' on page 33.**

**PLEASE NOTE!**
**Always pull out the starter cable in a straight line. If it is pulled out at an angle, friction will occur on the eyelet.**

As a result of this friction, the starter line will become frayed and will wear away faster. Always hold the starter cable when the starter line retracts.

Never allow the starter line to snap back when it has been pulled out.

### Starting the engine when warm
### (The equipment has been idle for less than 15-20min)

1 Set the equipment down on a hard, level surface.
2 Switch the On/Off switch to 'I' (Fig. 1/Item 9).
3 Secure the throttle lever (Fig. 1/Item 11)
(in the same way as described in 'Starting the engine when cold').
4 Hold the equipment firmly and pull out the starter cable until you feel it start to resist. Then tug sharply on the starter cable. The equipment should start after 1-2 tugs. If the equipment does not start after 6 tugs, repeat steps 1-7 of the procedure for starting the engine from cold.

### Switching off the engine

Emergency Stop procedure:
If it becomes necessary to stop the equipment immediately, set the On/Off switch (9) to 'Stop' or '0'.

Normal procedure:
Let go of the throttle lever (11) and wait until the engine has changed to idling speed. Then set the On/Off switch (9) to 'Stop' or '0'.

### Practical tips

Practice all the work steps with the engine switched off before you start to use the equipment.

### Extending the cutting line

**CAUTION!**

**Do not use any kind of metal wire or metal wire encased in plastic in the line spool. This may cause serious injuries to the user.**

**To extend the cutting line (13), run the engine at full speed and tap the line spool on the ground.**

**This will automatically extend the line. The blade on the guard hood will cut the line to the permissible length (Fig. 9b).**

**IMPORTANT!**

**Remove all grass and weed remnants at regular intervals to prevent the equipment from overheating.**

**Grass and weed remnants become trapped under the guard hood (Fig. 9c) and prevent the equipment from cooling sufficiently. Remove the remnants carefully using a screwdriver or the like.**

Fig. 9a

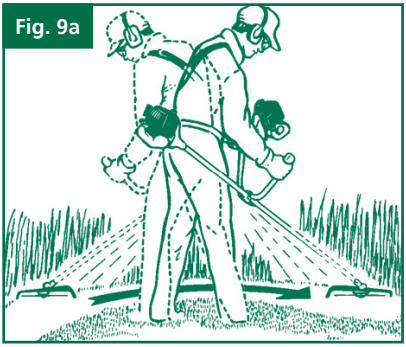

Fig. 9b

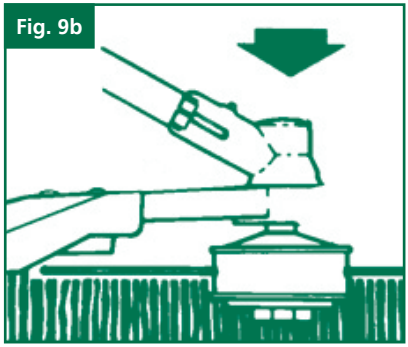

### Different cutting methods

When the equipment is correctly assembled it will cut weeds and long grass in places which are difficult to access, e.g. along fences, walls and foundations and also around trees. It can also be used for 'mowing' down vegetation so that a garden can be better prepared or a certain area cleared down to the soil.

Fig. 9c

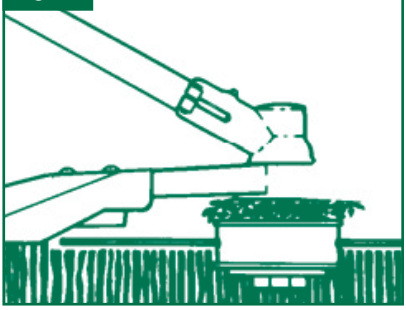

Fig. 9d

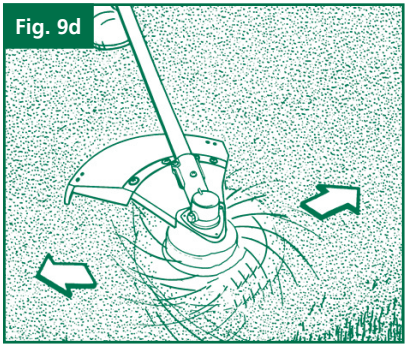

**PLEASE NOTE!**
**Even if it is used carefully, cutting around foundations, stone or concrete walls, etc. will result in the line suffering more than the normal level of wear.**

### Trimming/cutting (with line spool/cutting blade)

Swing the equipment from side to side in a scything motion. Always keep the cutting tool parallel to the ground.

Check the site and decide which cutting height you require. Guide and hold the cutting tool at the required height to ensure that you cut evenly (Fig. 9d).

### Low trimming (with line spool)

Hold the equipment right in front of you at a slight angle so that the underside of the line spool is above the ground and the line strikes the correct target. Always cut away from yourself. Never draw the equipment towards yourself.

### Cutting along fences/foundations (with line spool)

Approach wire mesh fences, lath fences, natural stone walls and foundations slowly so that you can cut close to them without striking the obstacle with the line. If, for example, the line strikes stones, stone walls or foundations, it will wear or fray. If the line strikes wire fencing, it will break.

### Trimming around trees (with line spool)

When trimming around tree trunks, approach slowly so that the line does not strike the bark. Walk around the tree and take care not to damage the tree. Approach grass or weeds with the tip of the line and tilt the line spool forwards slightly.

### Cutting down to the ground (with line spool)

When cutting down to the ground you will cut all the vegetation. To do this, set the line spool at an angle of 30° to the right. Place the handle in the required position (Fig. 9e).

**CAUTION!**
**Increased risk of injury to the user, bystanders and animals, and increased risk of damaging property due to objects (e.g. stones) being catapulted away.**

**CAUTION!**
**Do not use the equipment to remove objects from footpaths, etc. The 2 in 1 Petrol Grass Trimmer/Brush Cutter is a powerful tool and can catapult small stones and other objects a distance of 15 metres or more, causing injuries and damage to cars, houses and windows.**

### Sawing

The equipment is not suitable for sawing.

### Jamming

If the cutting tool jams as a result of attempting to cut vegetation that is too dense, switch off the engine immediately. Remove the grass and scrub from the equipment before you restart it.

Fig. 9e

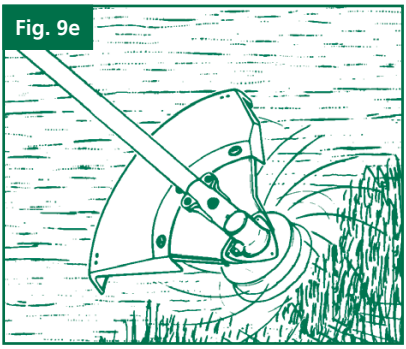

Fig. 9f

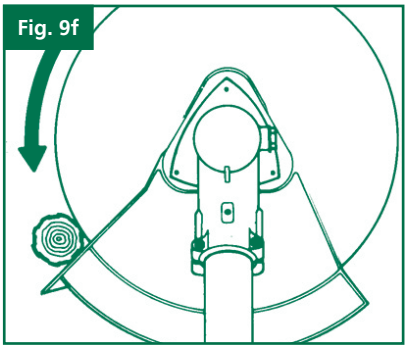

### Preventing recoil

When you work with the blade, there is a risk of recoil if it strikes solid objects (tree trunks, branches, tree stumps, stones or the like). This will throw the equipment backwards in the direction opposite to the rotation of the cutting tool. This can cause you to lose control of the equipment. Do not use the blade near fences, metal posts, boundary stones or foundations. For cutting slender wood growth, position the equipment as shown in Fig. 9f in order to prevent recoil.

## Maintenance and ordering of spare parts

Always switch off the equipment and disconnect the spark plug boot (36) before carrying out any maintenance work.

### Maintenance of the air filter

Soiled air filters reduce the engine output by supplying too little air to the carburettor. Regular checks are therefore essential. The air filter (35) should be checked after every 25 hours of use and cleaned if necessary. If the air contains a lot of dust, the air filter should be checked more frequently.

1 Remove the cover from the air filter housing (Fig. 10a/Item 8)
2 Remove the air filter (Fig. 10b/10c)
3 Clean the air filter by tapping it or blowing it out (with compressed air).
4 Assemble in reverse order.

**IMPORTANT!**
**Never clean the air filter with petrol or inflammable solvents.**

### Maintenance of the spark plug

Electrode gap = 0.6 mm (distance between the electrodes and between which the ignition spark is created). Tighten the spark plug to 12 to 15 Nm using a torque wrench (available from your dealer). Check the spark plug for dirt and grime after 10 hours of operation and if necessary clean it with a copper wire brush. Thereafter service the spark plug after every 50 hours of operation.

1 Dismantle the protective cap (Fig. 10c/Item 31) using a screwdriver.
2 Pull off the spark plug boot (Fig. 11a/Item 36).
3 Remove the spark plug (Fig. 11b) with the supplied spark plug wrench (27).
4 Assemble in reverse order.

Fig. 10a

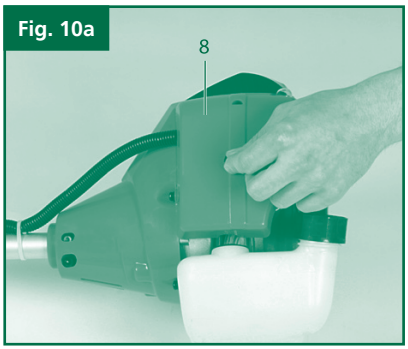


Fig. 10b

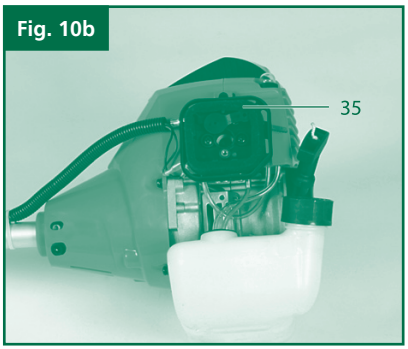


Fig. 10c

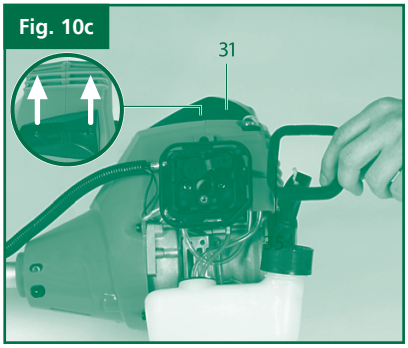


Fig. 11a

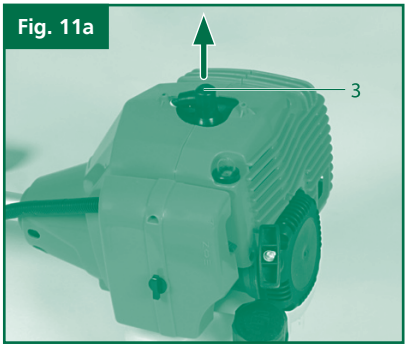


Fig. 11b

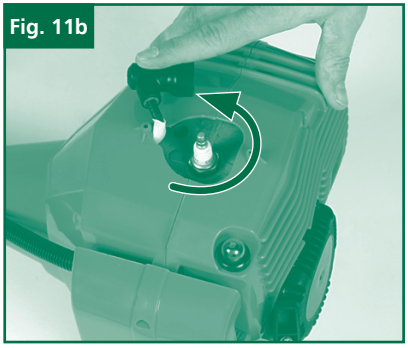

### Replacing the line spool/cutting line

1 Dismantle the line spool (13) as described under 'Fitting/Replacing the line spool' on page 16. Press the spool together (Fig. 12a) and remove one half of the housing (Fig. 12b).

2 Take the spool plate (K) out of the line spool housing (Fig. 12c).

3 Remove any remaining cutting line.

4 Place the new cutting line in the center and hang the loop which has formed into the recess in the spool splitter (Fig. 12d).

5 Wind up the line counter-clockwise and under tension. The spool splitter will separate the two halves of the line (Fig. 12e).

6 Hook the last 15 cm of the two ends of the line onto the opposite line holders of the spool plate (Fig. 12f).

7 Thread the two ends of the line through the metal eyelets in the line spool housing (Fig. 12c).

8 Press the spool plate into the line spool housing (Fig. 12b).

9 Pull the two line ends sharply to release them from the line holders.

10 Join the housing parts together again.

11 Cut the excess line to a length of around 13 cm. This will reduce the load on the engine when starting and warming up.

12 Refit the line spool (as described under 'Fitting/Replacing the line spool' on page 16). If you are replacing the complete line spool, skip points 3-6.

Fig. 12a

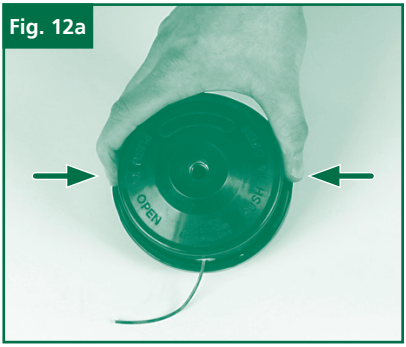


Fig. 12b

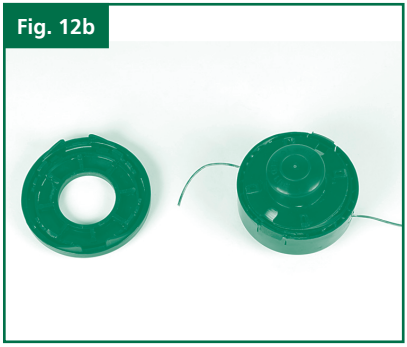

Fig. 12c

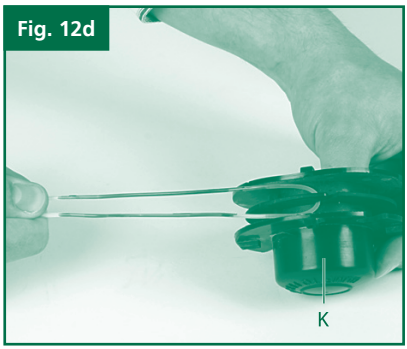

Fig. 12d

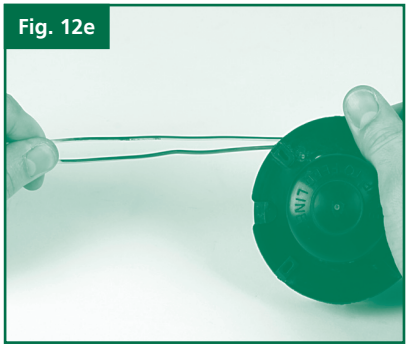
Fig. 12e

Fig. 12f

### Sharpening the guard hood blade

The guard hood blade (Fig. 7a/Item F) can become blunt over time. If you notice this, undo the two screws holding the guard hood blade to the guard hood. Clamp the blade in a vice. Sharpen the blade with a flat file and make sure that the angle of the cutting edge is not altered in the process. File in one direction only.

### Carburettor settings

**IMPORTANT!**
**Settings on the carburettor are allowed to be made by authorized customer service personnel. The air filter housing cover must be removed before any work on the carburettor, as shown in Figures 10a and 10b.**

### Setting the throttle cable

If the maximum speed of the equipment drops over time and you have ruled out all the other possible causes listed in the section 'Troubleshooting' on page 33, it may be necessary to adjust the throttle cable.

First of all check whether the carburettor opens fully when the throttle lever is pressed right through. This is correct if the carburettor slide (Fig. 13a/Item F) is completely opened when the throttle is fully activated.

Figure 13a shows the correct setting. If the carburettor slide is not completely open, it must be adjusted.

The following steps are required to adjust the throttle cable:

- Undo the lock nut (Fig. 13b/Item C) a few turns.
- Undo the adjusting screw (Fig. 13b/Item D) until the carburettor slide is completely open when the throttle is fully activated, as shown in Figure 13a.
- Retighten the lock nut.

### Setting the idling speed

**CAUTION!**

**Set the idling speed when the equipment is warm. If the engine stalls when the throttle is not pressed and you have ruled out all the other possible causes listed in the section 'Troubleshooting' on page 33, the idling speed must be adjusted. To do this turn the idling speed screw (Fig. 13b Item E) clockwise until the equipment runs smoothly at idling speed.**

**If the idling speed is so fast that the cutting tool turns as well, it has to be reduced by turning the idling speed screw for as far as is required for the cutting tool to stop rotating.**

Fig. 13a

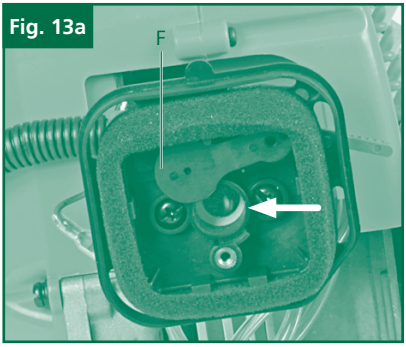


Fig. 13b

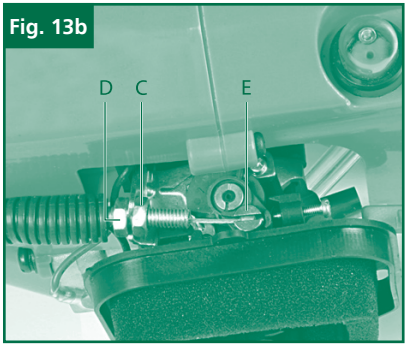

### Applying grease to the gear unit

Add a little gear grease (approx. 10 g) after every 20 hours of operation.
To do so, open the screw H (Fig. 7c).

### Environmental protection

Dispose of soiled maintenance material and operating materials at the appropriate collection point. Recycle packaging material, metal and plastics.

## Ordering replacement parts

Please quote the following data when ordering replacement parts:

- Type of machine (GLBC 43)
- Article number of the machine (34.019.97)
- Identification number of the machine (11013)
- Replacement part number or description of the part required

For our latest prices and information please go to www.einhell.co.uk

## Storage and transport

### Storage

**IMPORTANT!**
**Never put the equipment into storage for longer than 30 days without carrying out the following steps.**

### Storing the equipment

If you intend to store the equipment for longer than 30 days, it must be prepared accordingly. Otherwise the fuel still remaining in the carburettor will evaporate and leave a rubbery sediment. This can cause problems when starting up the equipment and may require expensive repairs.

1. Slowly remove the fuel tank cap to release any pressure that may have formed in the tank. Carefully empty the tank (6).
2. To remove the fuel from the carburettor, start the engine and let it run until the equipment stops.
3. Leave the engine to cool (approx. 5 minutes).
4. Remove the spark plug (see 'Maintenance of the spark plug' on page 26).
5. Add one teaspoon of 2-stroke engine oil into the combustion chamber.
   Slowly pull the starter cord several times to apply a layer of oil to all internal parts.

**NOTE!**
**Store the equipment in a dry place and far away from possible ignition sources such as an oven, a gas-fired hot water boiler, a gas-fired dryer, etc.**

### Putting the equipment back into operation

1. Remove the spark plug (see 8.3).
2. Quickly tug on the starter line to remove excess oil from the combustion chamber.
3. Clean the spark plug and check that the electrode gap is correct, or insert a new spark plug with the correct electrode gap.
4. Prepare the equipment for operation.
5. Fill the tank with the relevant mixture of fuel and oil. See the section 'Fuel and oil' on page 18.

### Transport

To transport the equipment, empty the petrol tank as described in the section 'Storage' on page 31. Clean coarse dirt off the equipment with a brush or hand brush. Dismantle the steady grip and the long hande as described under the section 'Before starting the equipment' on page 12.

## Cleaning

Always switch off the equipment and disconnect the spark plug boot before carrying out any cleaning work.

- The equipment should be cleaned thoroughly every time after it has been used. This applies particularly to the cutting tool and the guard hoods.
- Keep the air vents and the motor housing free of dirt and dust as far as possible. Wipe the equipment with a clean cloth or blow it down with compressed air at low pressure.
- It is easiest to remove dirt and grass immediately after use.
- Clean the equipment regularly with a damp cloth and some soft soap. Do not use cleaning agents or solvents; these may be aggressive to the plastic parts in the equipment. Ensure that no water can get into the interior of the equipment.

## Troubleshooting

| | | |
|---|---|---|
| The motor does not start | Correct starting procedure not followed | Follow the instructions for starting |
| | Sooted or damp spark plug | Clean the spark plug or replace it with a new one |
| | Incorrect carburettor setting | Contact either an authorized customer service outlet or the After Sales support details at the bottom of the page. |
| The equipment starts but does not develop its full power | Incorrect choke lever (5) setting | Set the choke lever to '' |
| | Soiled air filter (35) | Clean the air filter |
| | Incorrect carburettor setting | Contact either an authorized customer service outlet or the After Sales support details at the bottom of the page. |
| The engine does not run smoothly | Incorrect electrode gap on the spark plug | Clean the spark plug and adjust the electrode gap or fit a new spark plug |
| Engine smokes excessively | Incorrect fuel mix | Use the correct fuel mix (see fuel mixing table) |

## Technical data

| | |
|---|---|
| Engine type | 2-stroke engine, air-cooled, chrome cylinder |
| Engine power (max.) | 1.35 kW / 1.8 hp |
| Displacement | 42.7 ccm |
| Idle engine speed | 3000 $min^{-1}$ |
| Max. engine speed: | |
| with blade: | 9000 $min^{-1}$ |
| with line spool: | 8400 $min^{-1}$ |
| Max. cutting speed | |
| with blade: | 6800 $min^{-1}$ |
| with line spool: | 6300 $min^{-1}$ |
| Ignition | Electronic |
| Drive | Centrifugal clutch |
| Weight (with empty tank) | 7.5 kg |
| Cutting circle diameter of line | 41 cm |
| Cutting circle diameter of blade | 23 cm |
| Cutting line length | 8.0 m |
| Cutting line diameter | 2.0 mm |
| Tank capacity | 0.8 L |
| Spark plug | Champion RCJ6Y |
| Fuel consumption at max. engine power | 0.6 kg/h |
| Specific fuel consumption at max. engine power | 446 g/kWh |

### Sound and vibration

| | |
|---|---|
| $L_{pA}$ sound pressure level | 98 dB(A) |
| $K_{pA}$ uncertainty | 1.5 dB |
| $L_{WA}$ sound power level | 110 dB(A) |
| $K_{WA}$ uncertainty | 1.5 dB |

### Wear ear defenders

- The impact of noise can cause damage to your hearing.

### Operation

- Vibration emission value $a_h$ = 4.1 m/s$^2$
- K uncertainty = 1.5 m/s$^2$

### Keep the noise emissions and vibrations to a minimum

- Only use appliances which are in perfect working order.
- Service and clean the appliance regularly.
- Adapt your working style to suit the appliance.
- Do not overload the appliance.
- Have the appliance serviced whenever necessary.
- Switch the appliance off when it is not in use.
- Wear protective gloves.

## Disposal and recycling

The unit is supplied in packaging to prevent it being damaged in transit. This packaging is raw material and can therefore be reused or can be returned to the raw material stream.

The unit and its accessories are made of various types of material, such as metal and plastic. Defective components must be disposed of as special waste. Ask your dealer or your local council.

## ISC GmbH · Eschenstraße 6 · D-94405 Landau/Isar

CE

### Declaration of Conformity

(D) erklärt folgende Konformität gemäß EU-Richtlinie und Normen für Artikel
(GB) explains the following conformity according to EU directives and norms for the following product
(F) déclare la conformité suivante selon la directive CE et les normes concernant l'article
(I) dichiara la seguente conformità secondo la direttiva UE e le norme per l'articolo
(NL) verklaart de volgende overeenstemming conform EU richtlijn en normen voor het product
(E) declara la siguiente conformidad a tenor de la directiva y normas de la UE para el artículo
(P) declara a seguinte conformidade, de acordo com a directiva CE e normas para o artigo
(DK) attesterer følgende overensstemmelse i medfør af EU-direktiv samt standarder for artikel
(S) förklarar följande överensstämmelse enl. EU-direktiv och standarder för artikeln
(FIN) vakuuttaa, että tuote täyttää EU-direktiivin ja standardien vaatimukset
(EE) tõendab toote vastavust EL direktiivile ja standarditele
(CZ) vydává následující prohlášení o shodě podle směrnice EU a norem pro výrobek
(SLO) potrjuje sledečo skladnost s smernico EU in standardi za izdelek
(SK) vydáva nasledujúce prehlásenie o zhode podľa smernice EU a noriem pre výrobok
(H) a cikkekhez az EU-irányvonal és Normák szerint a következő konformitást jelenti ki
(PL) deklaruje zgodność wymienionego poniżej artykułu z następującymi normami na podstawie dyrektywy WE.
(BG) декларира съответното съответствие съгласно Директива на ЕС и норми за артикул
(LV) paskaidro šādu atbilstību ES direktīvai un standartiem
(LT) apibūdina šį atitikimą EU reikalavimams ir prekės normoms
(RO) declară următoarea conformitate conform directivei UE şi normelor pentru articolul
(GR) δηλώνει την ακόλουθη συμμόρφωση σύμφωνα με την Οδηγία ΕΚ και τα πρότυπα για το προϊόν
(HR) potvrđuje sljedeću usklađenost prema smjernicama EU i normama za artikl
(BIH) potvrđuje sljedeću usklađenost prema smjernicama EU i normama za artikl
(RS) potvrđuje sledeću usklađenost prema smernicama EZ i normama za artikal
(RUS) следующим удостоверяется, что следующие продукты соответствуют директивам и нормам ЕС
(UKR) проголошує про зазначену нижче відповідність виробу директивам та стандартам ЄС на виріб
(MK) ја изјавува следната сообрзност согласно ЕУ-директивата и нормите за артикли
(TR) Ürünü ile ilgili AB direktifleri ve normları gereğince aşağıda açıklanan uygunluğu belirtir
(N) erklærer følgende samsvar i henhold til EU-direktivet og standarder for artikkel
(IS) Lýsir uppfyllingu EU-reglna og annarra staðla vöru

### Petrol Scythe GLBC 43 (Gardenline)

- [ ] 87/404/EC_2009/105/EC
- [ ] 2005/32/EC_2009/125/EC
- [ ] 2006/95/EC
- [ ] 2006/28/EC
- [x] 2004/108/EC
- [ ] 2004/22/EC
- [ ] 1999/5/EC
- [ ] 97/23/EC
- [ ] 90/396/EC_2009/142/EC
- [ ] 89/686/EC_96/58/EC
- [ ] 2011/65/EC

- [x] 2006/42/EC
  - [ ] Annex IV
    Notified Body:
    Notified Body No.:
    Reg. No.:
- [x] 2000/14/EC_2005/88/EC
  - [x] Annex V
  - [ ] Annex VI
    Noise: measured $L_{WA}$ = 104.7 dB (A); guaranteed $L_{WA}$ = 110 dB (A)
    P = 1.35 KW; L/Ø = cm
    Notified Body:
- [x] 2004/26/EC
  Emission No.: e11*97/68SA*2004/26*1181*00

### Standard references: EN ISO 11806; EN ISO 14982

Landau/Isar, den 08.01.2014

Weichselgartner/General-Manager

Luo Yong/Product-Management

**First CE: 13**
**Art.-No.:** 34.019.97 **I.-No.:** 11013
**Subject to change without notice**

**Archive-File/Record:** NAPR009671
**Documents registrar:** Markus Jehl
Wiesenweg 22, D-94405 Landau/Isar

| | |
|---|---|
| How do I claim for a warranty matter? | 1. Fill in the Warranty card and send to the Einhell UK Ltd Address.<br>2. Contact Einhell UK Ltd, using one of the Telephone numbers for AFTER SALES SUPPORT.<br>3. Or contact via the Einhell UK Ltd website. |
| How do I obtain spare parts (not covered by the warranty)? | Make sure you have the information from the product data label, or page 31 of this manual, and then: -<br>1. Contact Einhell UK Ltd, using one of the Telephone numbers for AFTER SALES SUPPORT, and choose the option for Spare Parts.<br>2. Or contact via the Einhell UK Ltd website, where spares information & prices are available. |

GARDENLINE®

# 2 in 1 Petrol Grass Trimmer/Brush Cutter

**IMPORTANT!**
**KEEP THIS FORM SAFE: Only complete and return this form to the address below in the unlikely event of a warranty claim, if you are requested by the manufacturer to return the item for replacement. Then please complete this form and send it together with your receipt (proof of purchase) to the address below.**

**Your details:**

Name _____

Address _____

_____

_____

☎ _____ Email _____

Date of purchase* _____

*We recommend you keep the receipt with this warranty card

Location of purchase _____

**Description of malfunction:**

**Return your completed warranty card to:**

Einhell UK Ltd
Unit 9, Stadium Court
Wirral International Business Park
Plantation Road
Bromborough
CH62 3QG

www.einhell.co.uk/warranty

## AFTER SALES SUPPORT

☎ GB 0151 649 1500
IRL 1890 946244

www.einhell.co.uk

MODEL: GLBC 43

Monday to Thursday 8:45am - 5pm, Friday 8:45am - 3pm. Calls cost 10p per minute from a landline, calls from mobiles may vary.

**3**
YEAR WARRANTY