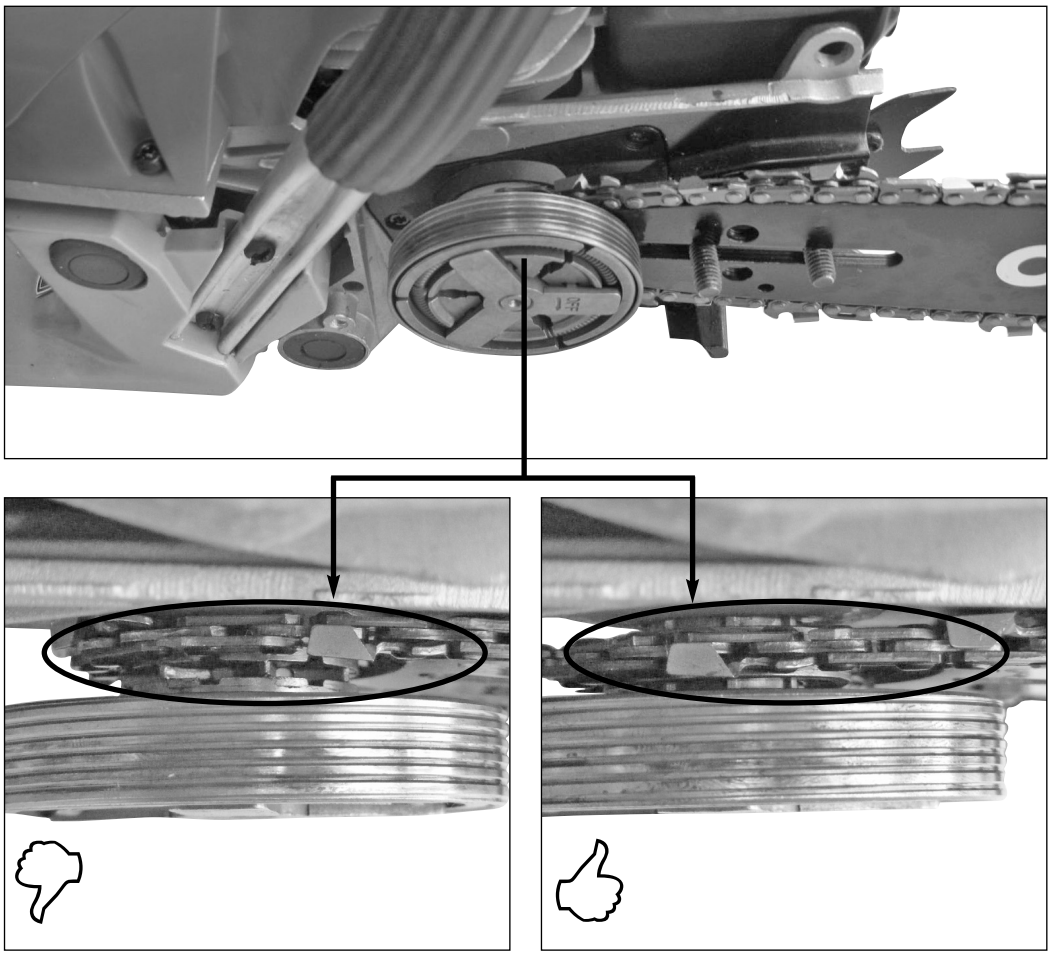

GB **Important:** Make sure that the chain is correctly seated on the drive wheel.