ai170314728319_Quick_Start_Guide_Freelexo_CAM_PLUS.pdf 1 21.12.2023 09:28:11

Einhell

FREELEXO CAM PLUS

1

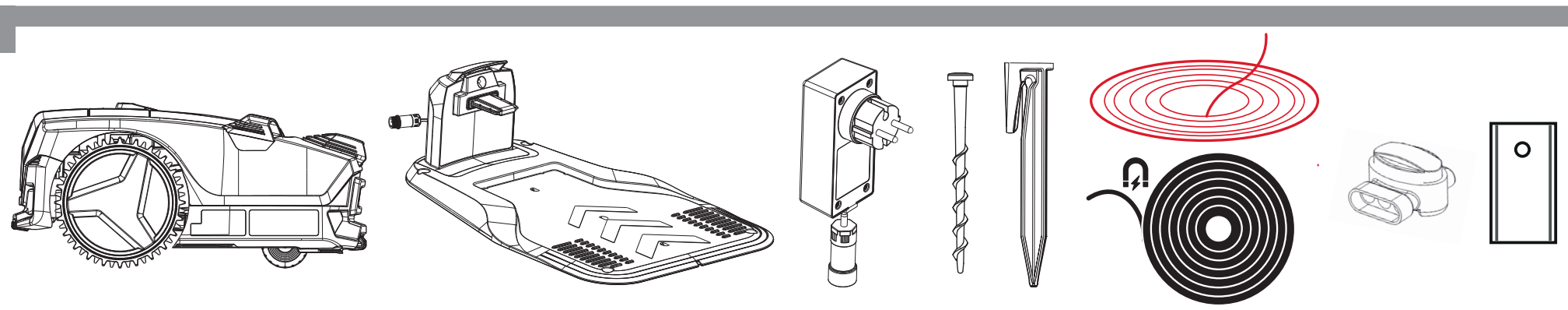

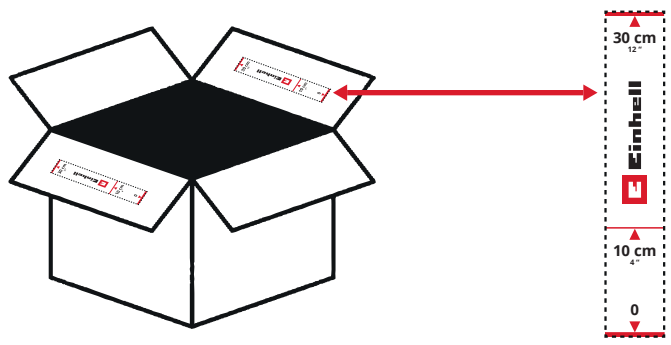

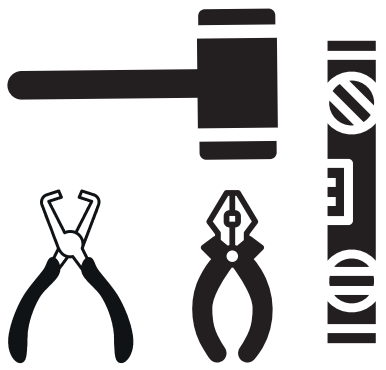

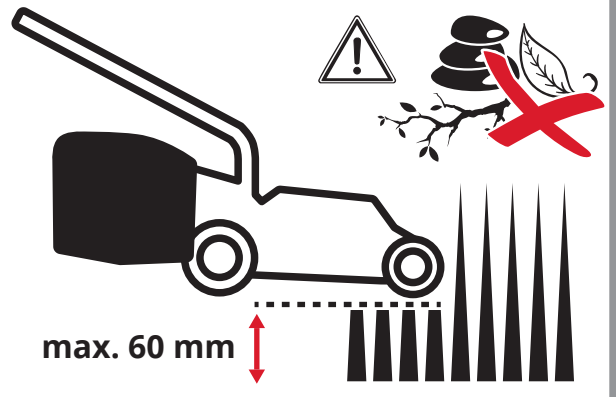

2

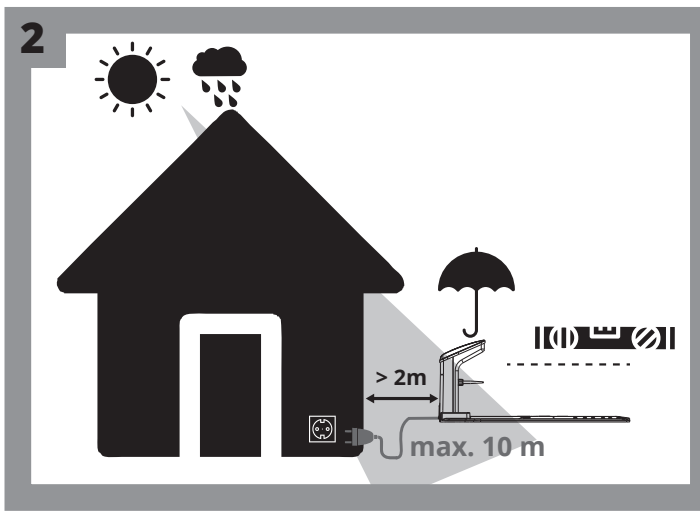

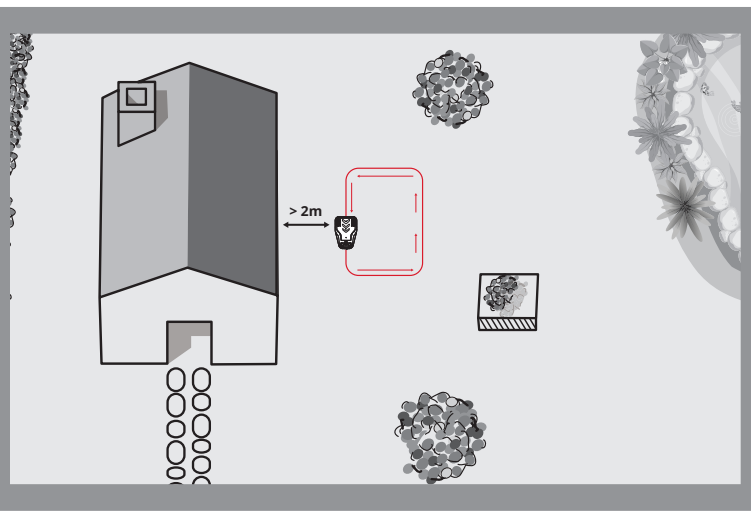

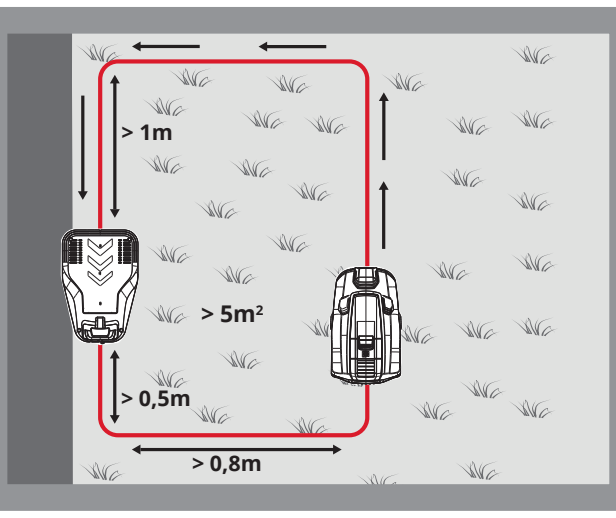

3

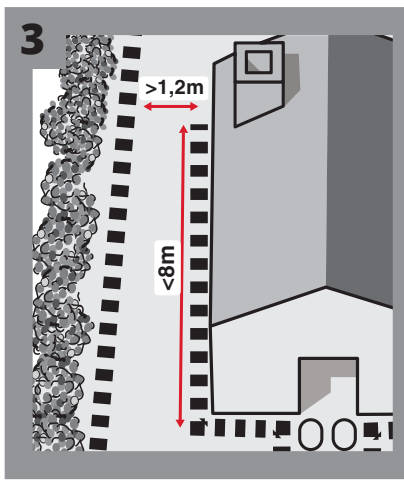

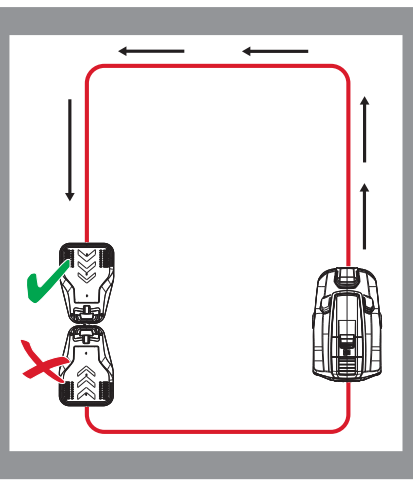

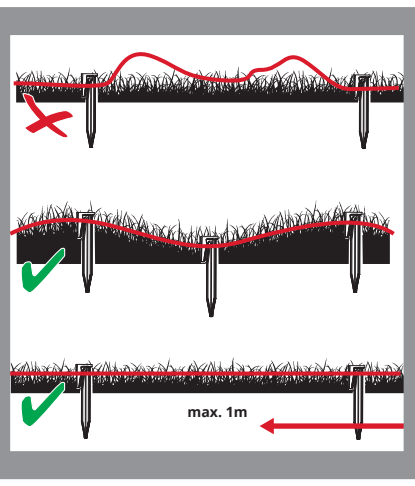

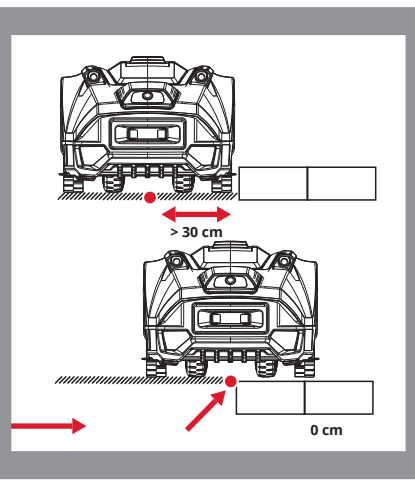

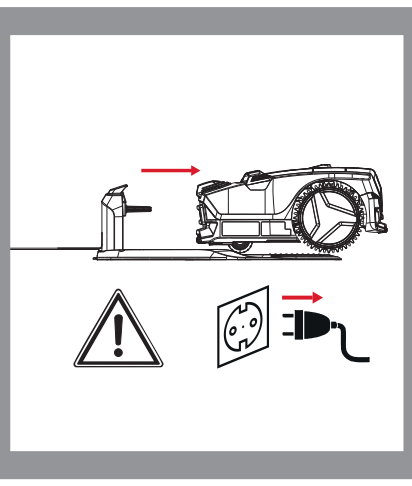

4

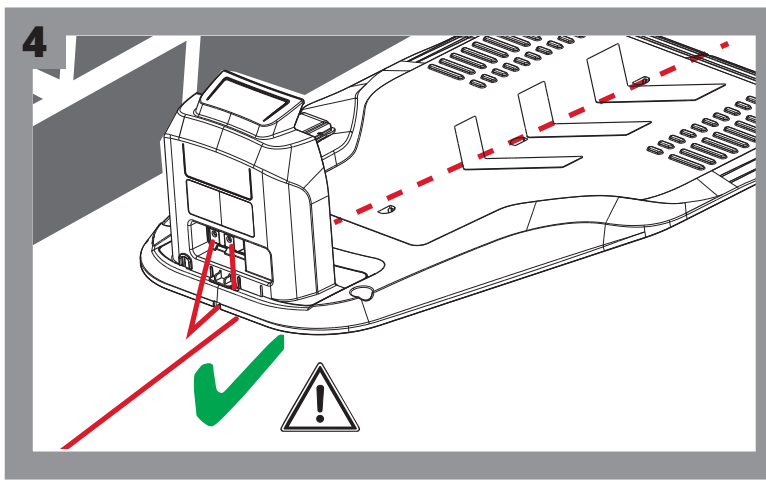

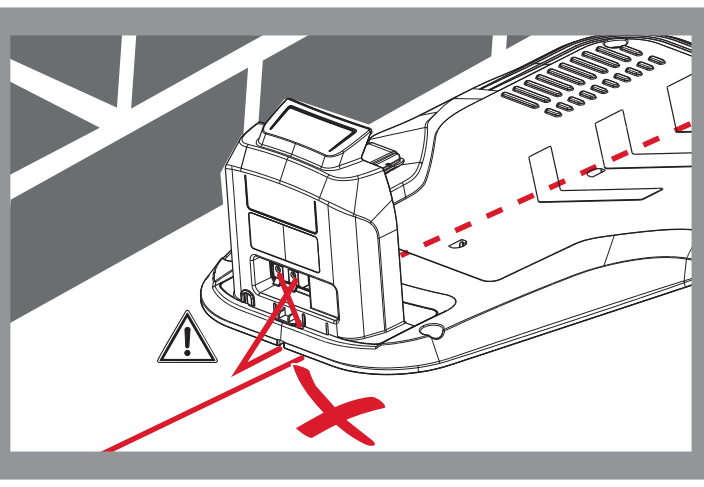

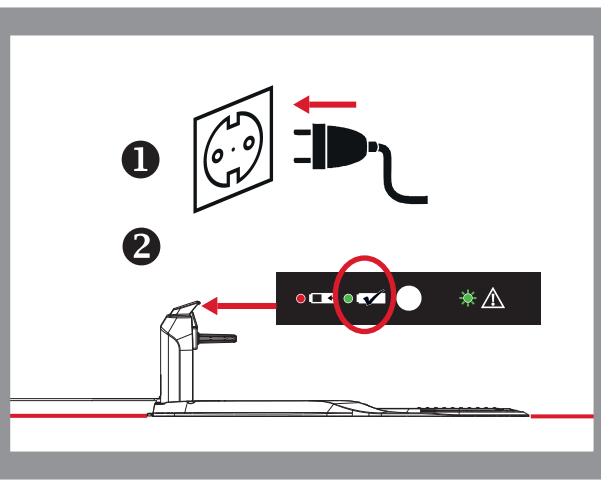

ai170314728319_Quick_Start_Guide_Freelexo_CAM_PLUS.pdf 2 21.12.2023 09:28:39

5

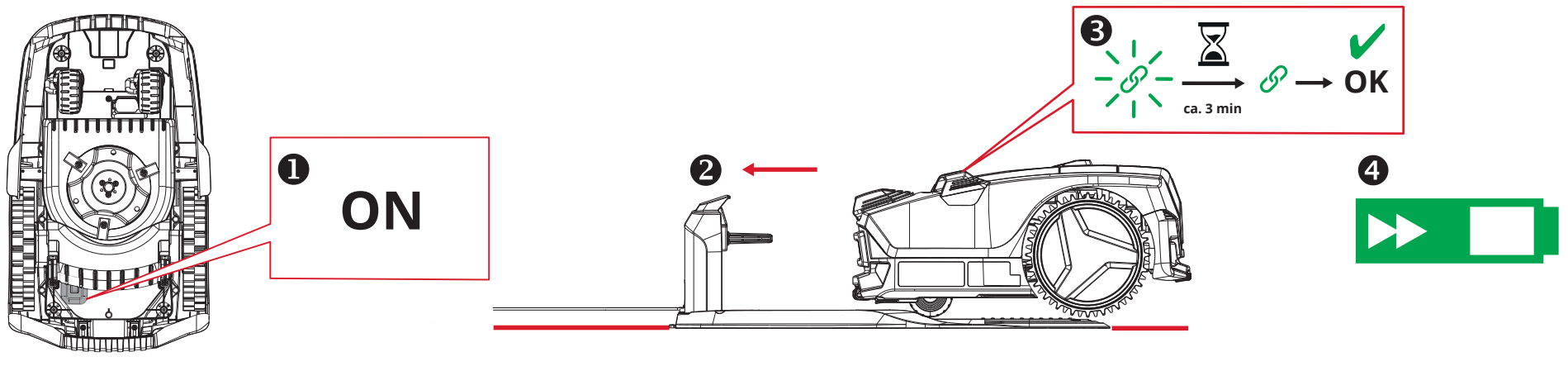

6

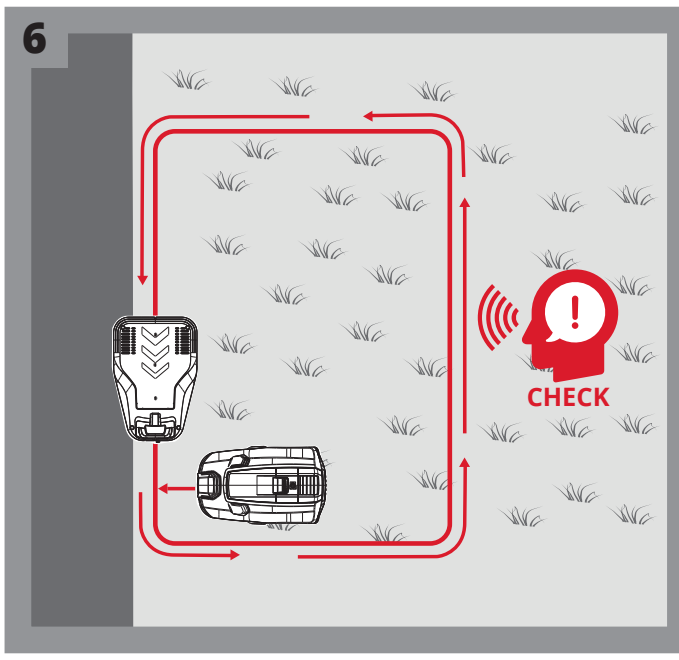

1
PIN: 0-0-0-0
(0 → OK)

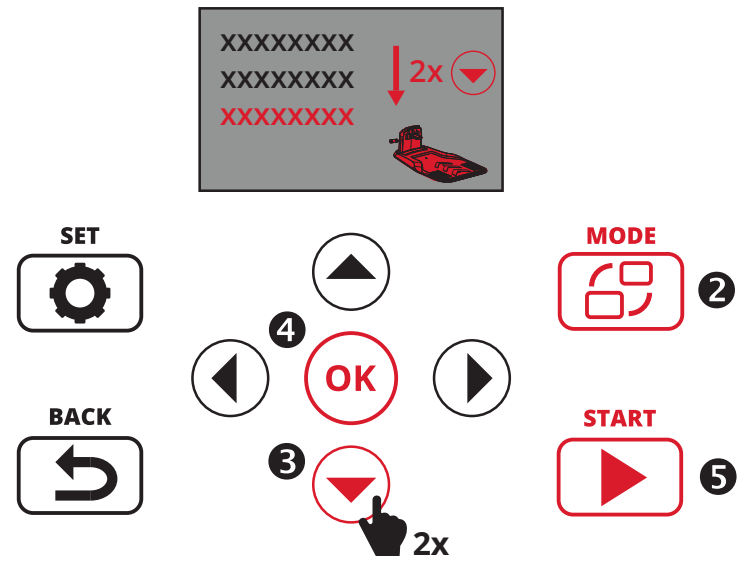

7

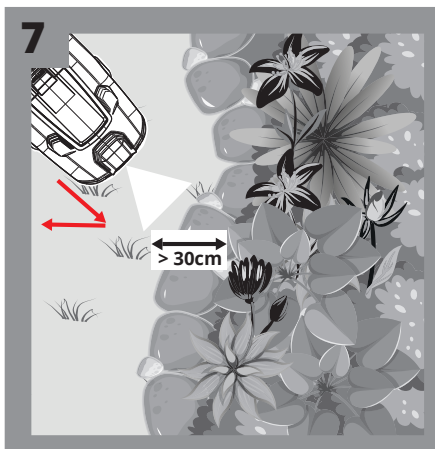

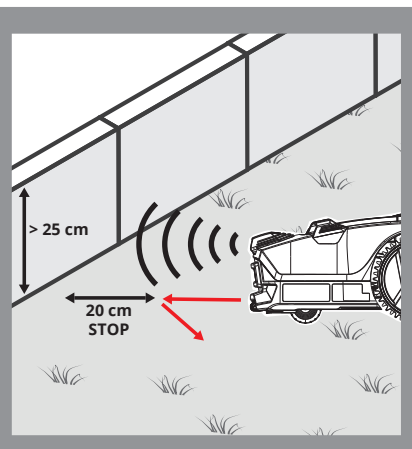

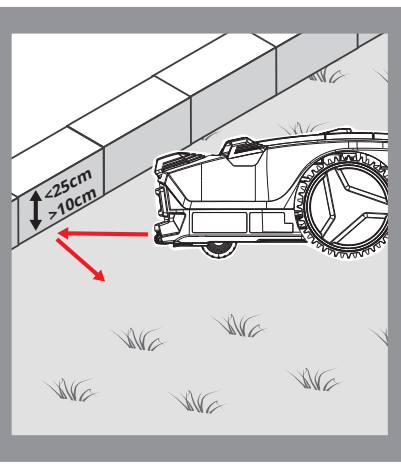

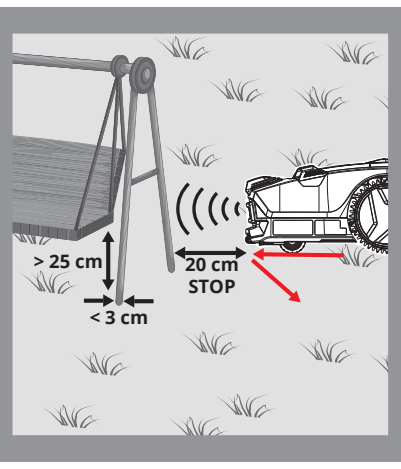

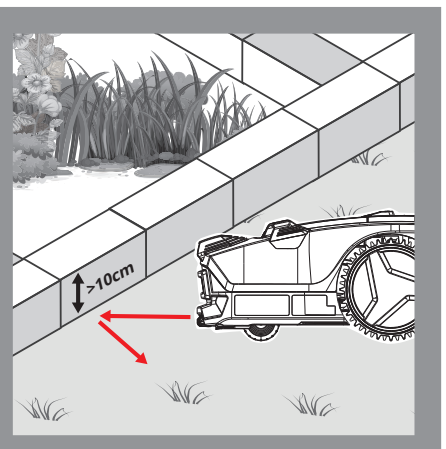

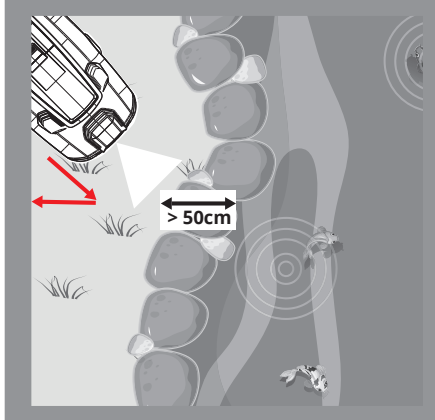



XXXXXXXX
XXXXXXXX
XXXXXXXX

1
PIN: 0-0-0-0
(0 → OK)

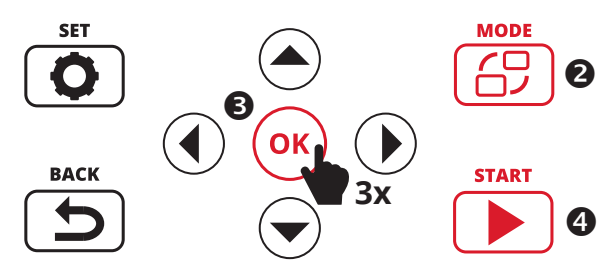

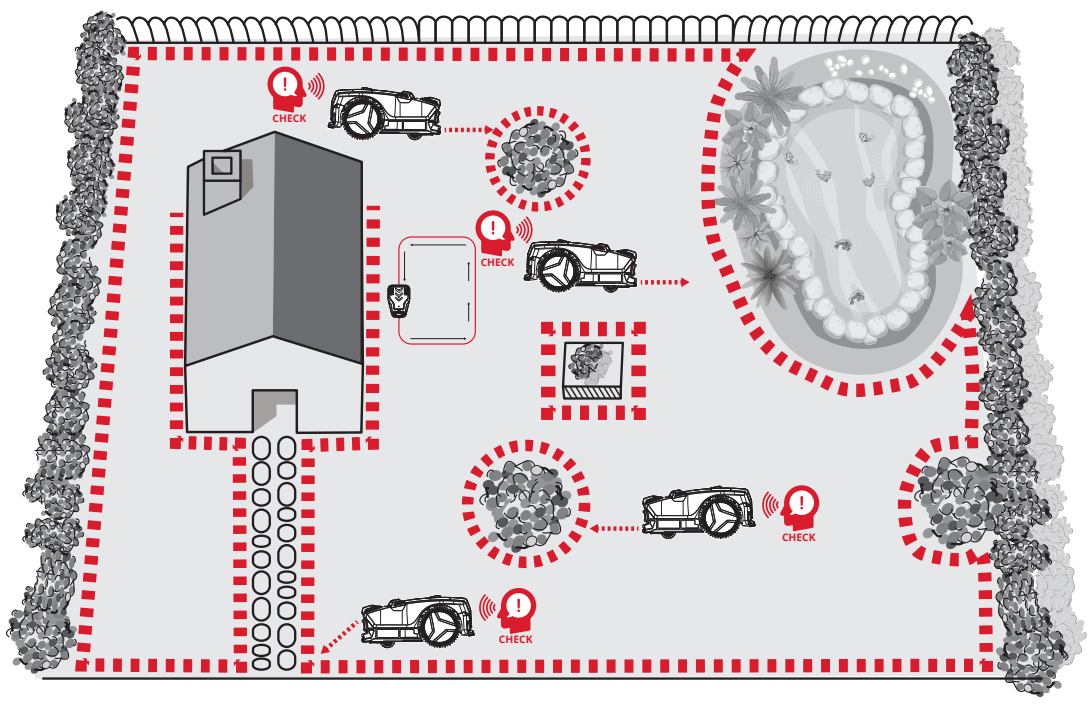

8

1
PIN: 0-0-0-0
(0 → OK)

